THIS DRAWING IS UNPUBLISHED. RELEASED FOR PUBLICATION -
© COPYRIGHT copyright_dBYe- ALL RIGHTS RESERVED.

REVISIONS

P	LTR	DESCRIPTION	DATE	DWN	APVD
	B	ECR-16-010100	14JUL2016	L.Z	X.X
	C	ECR-19-009136	24OCT2019	C,D	C.W

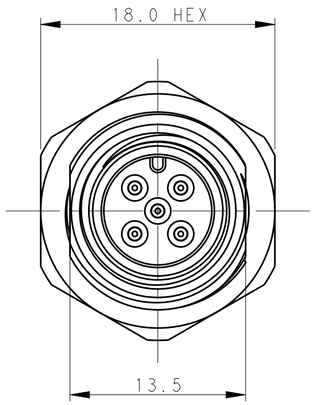

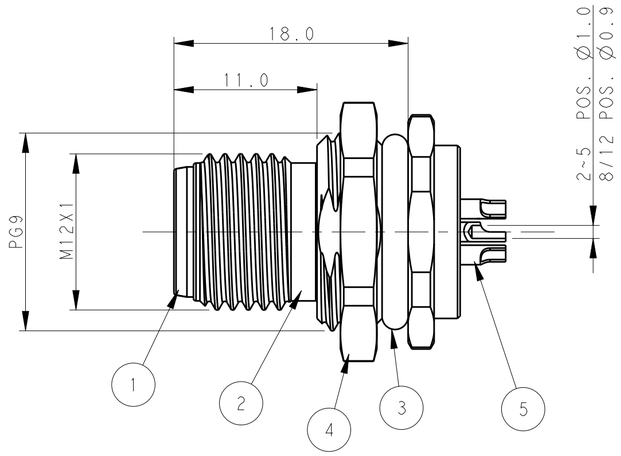

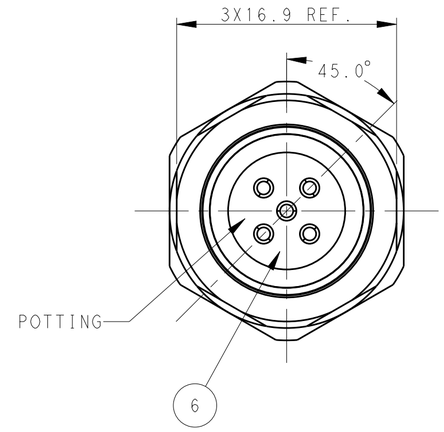

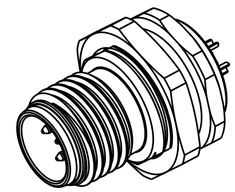

TABLE 1

TECHNICAL DATA	T4130012021-000	T4130012031-000	T4130012041-000	T4130012051-000
RATED VOLTAGE	250V	250V	250V	60V
RATED CURRENT	4A	4A	4A	4A
POLLUTION DEGREE	3	3	3	3
OVERVOLTAGE CATEGORY	II	II	II	II
MATERIAL GROUP	II	II	II	II
CONTACT RESISTANCE	<=10mΩ	<=10mΩ	<=10mΩ	<=10mΩ
INSULATION RESISTANCE	>100MΩ	>100MΩ	>100MΩ	>100MΩ
DEGREE OF PROTECTION	IP67	IP67	IP67	IP67
OPERATION TEMPERATURE	-40~85°C	-40~85°C	-40~85°C	-40~85°C

NOTE:
1. TECHNICAL DATA: SEE TABLE 1
2. RECOMMENDED MOUNT PANEL SEE DETAIL
3. PACKAGING:1 PIECE IN A BAG
4. ALL DIMENSIONS ARE FOR NOMINAL REFERENCE ONLY UNLESS OTHERWISE STATED

T41300120X1-000
- CONTACT FINISH:
  - 1; GOLD 3u''
- NUMBER OF PINS:
  - 02: 2 PINS
  - 03: 3 PINS
  - 04: 4 PINS
  - 05: 5 PINS

注释：
1. 技术参数，见表1
2. 推荐开孔尺寸详见如图所示
3. 包装：1PCS/袋
4. 所有尺寸仅供参考，除非另有说明

T41300120X1-000
- 端子电镀：
  - 1: 3u''金
- 针数：
  - 02: 2 针
  - 03: 3 针
  - 04: 4 针
  - 05: 5 针

PIN ARRANGEMENT
A-CODE

T4130012021-000

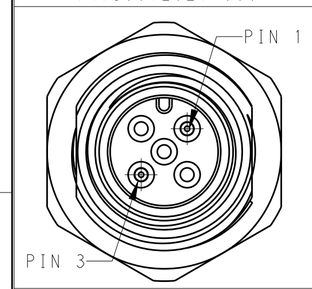

T4130012031-000

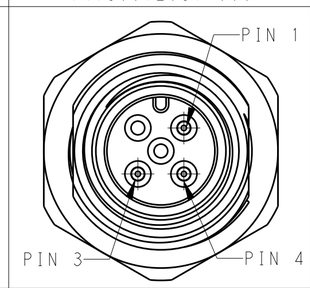

T4130012041-000

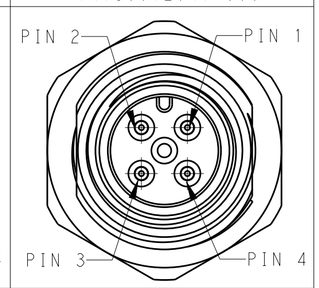

T4130012051-000

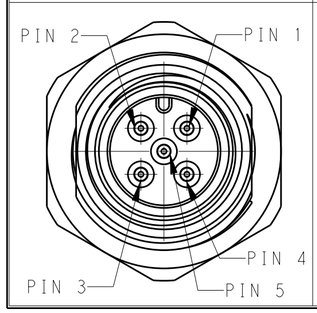

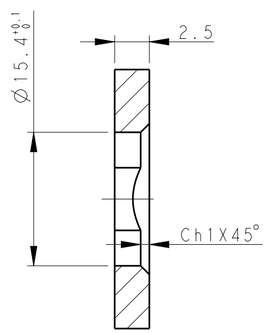

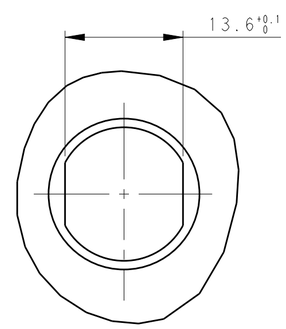

RECOMMENDED PANEL CUTOUT

PART NUMBER	TYPE
T4130012021-000	RPC-M12-MF-2CON-PG9-LAU
T4130012031-000	RPC-M12-MF-3CON-PG9-LAU
T4130012041-000	RPC-M12-MF-4CON-PG9-LAU
T4130012051-000	RPC-M12-MF-5CON-PG9-LAU

PLATING	MATERIAL	DESCRIPTION	ITEM	T4130012021-000	T4130012031-000	T4130012041-000	T4130012051-000
-	EPOXY RESIN	POTTING ADHESIVE	6	1	1	1	1
GOLD PLATED	COPPER ALLOY	CONTACT	5	2	3	4	5
NICKEL PLATED	COPPER ALLOY	METAL NUT	4	1	1	1	1
BLACK	RUBBER	O-RING	3	1	1	1	1
NICKEL PLATED	COPPER ALLOY	M12,MALE,METAL BODY	2	1	1	1	1
BLACK	PA66	M12,MALE HSG	1	1	1	1	1

THIS DRAWING IS A CONTROLLED DOCUMENT.

DIMENSIONS: mm

TOLERANCES UNLESS OTHERWISE SPECIFIED:
0 PLC ±-
1 PLC ±0.2
2 PLC ±0.2
3 PLC ±0.2
4 PLC ±-
ANGLES ±-

MATERIAL - -
FINISH - -

DWN BO GAO 28JAN2016
CHK KOBBY ZHAO 28JAN2016
APVD XIANG XU 28JAN2016
PRODUCT SPEC 108-106140
APPLICATION SPEC 114-137144
WEIGHT -

TE Connectivity

NAME M12 PANEL MOUNT CONNECTOR
A CODE, MALE, REAR MOUNTING

SIZE A2 | CAGE CODE - | DRAWING NO C-T41300120X1000 | RESTRICTED TO

CUSTOMER DRAWING | SCALE 3:1 | SHEET 1 OF 1 | REV C

1471-9 (3/13)