| PART NAME | NEMA 4X PLASTIC BOX w/EXTERNAL MTG. BRKT. | PART No. | PN-1331-MB PN-1331-CMB PN-1331-DGMB | REVISION DATE | 2-10-14 |
|---|---|---|---|---|---|

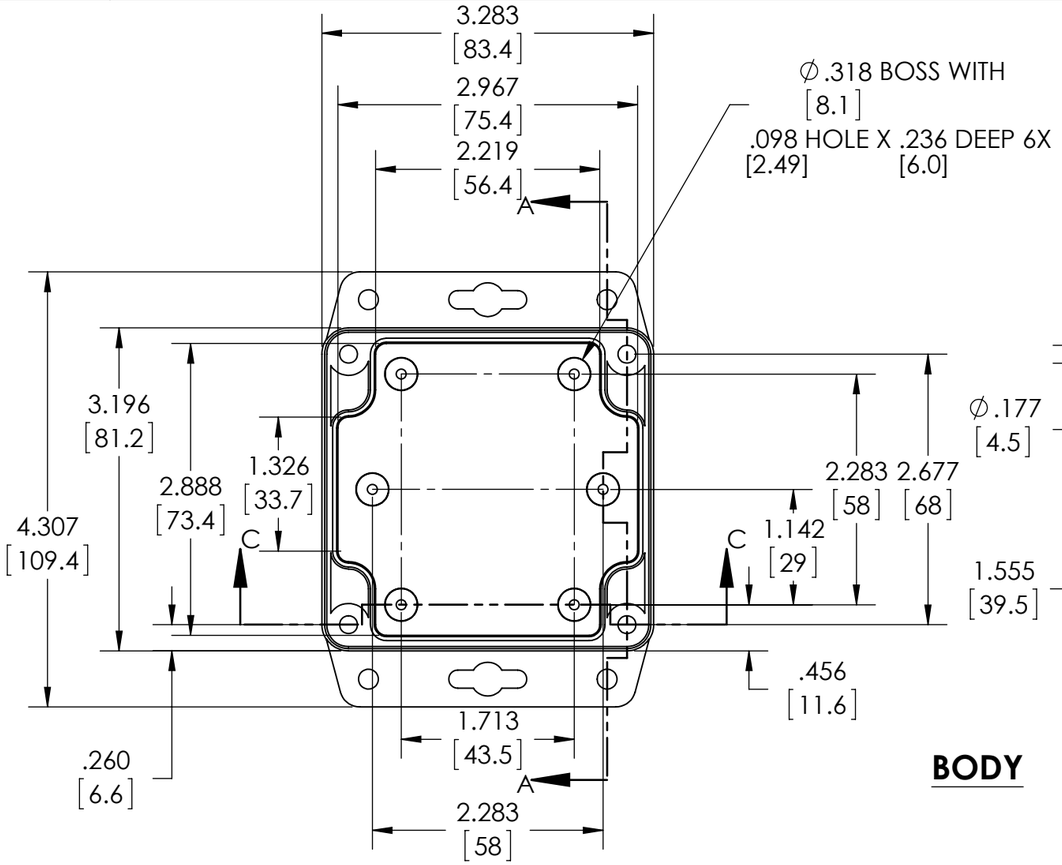


**BODY**

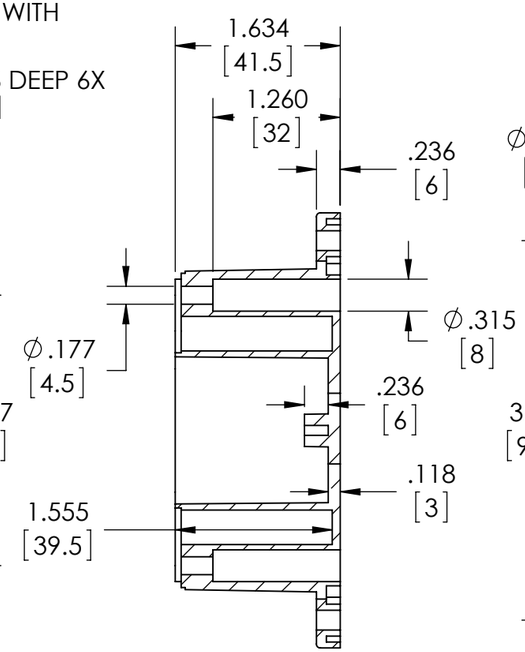


SECTION A-A
SCALE 1 : 1.5

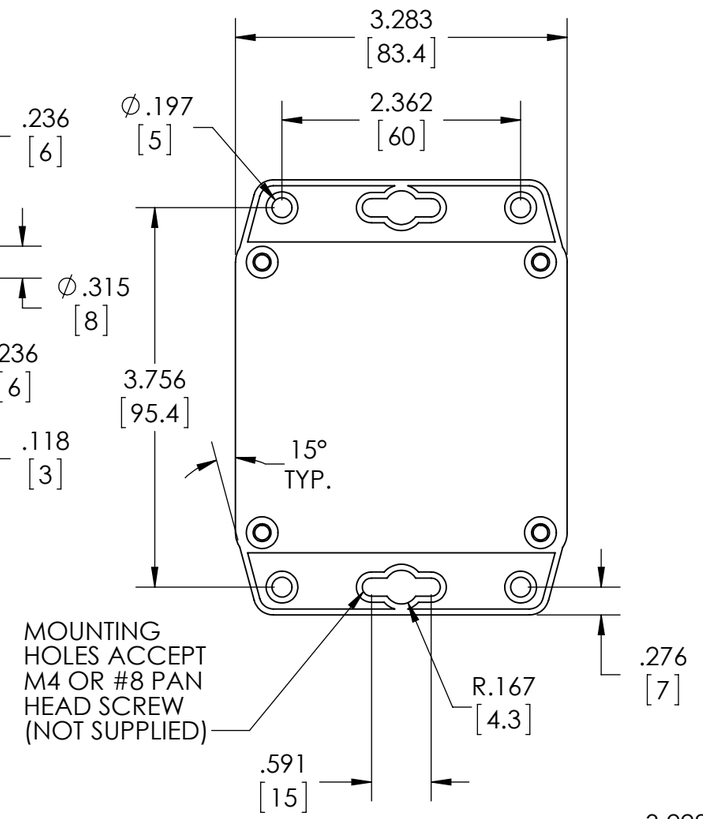


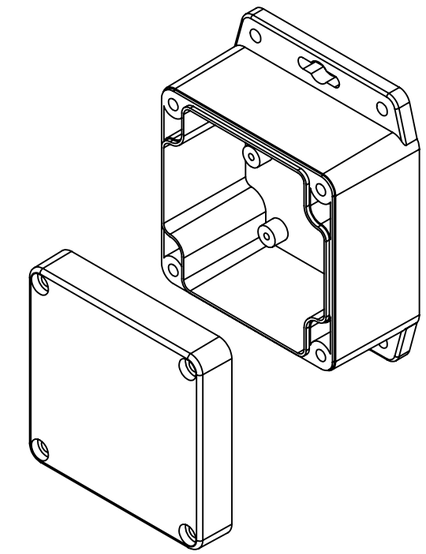

SHOWN WITH COVER

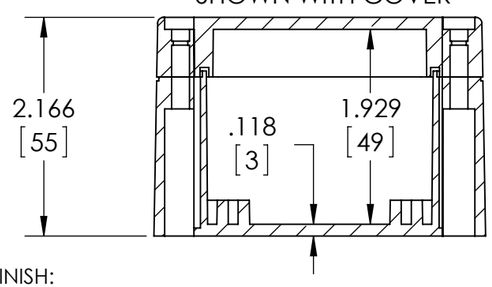


SECTION C-C
SCALE 1 : 1.5

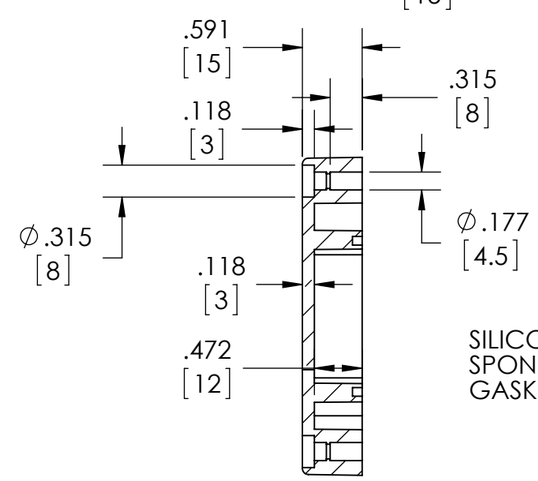


SECTION B-B
SCALE 1 : 1.5

**COVER**

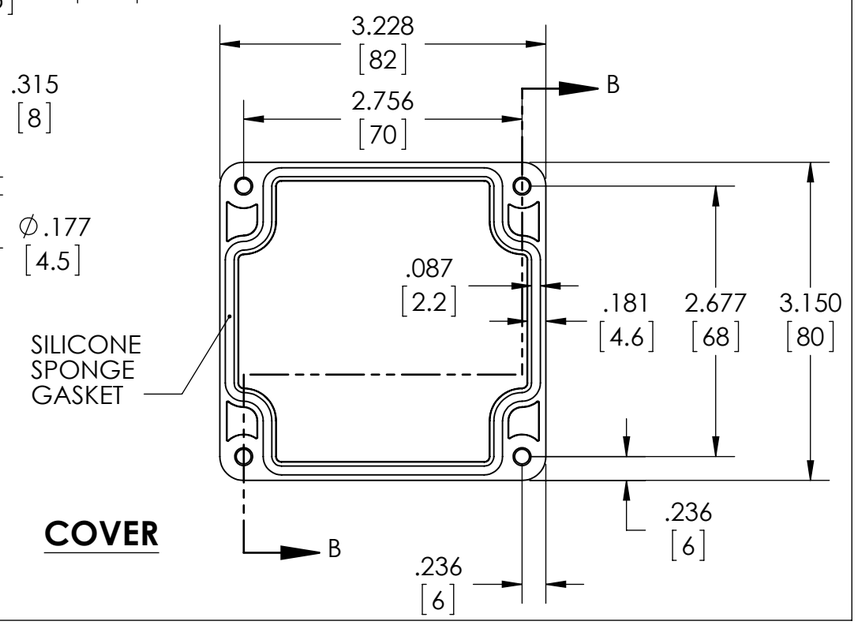


MATERIAL & FINISH:
(-MB SUFFIX PART NO.) POLYCARBONATE UL94-HB, UV STABILIZED, SERVICE TEMPERATURE RANGE: -40°C TO +120°C, LIGHT GRAY BODY & COVER.
(-CMB SUFFIX PART NO.) SAME AS -MB EXCEPT CLEAR COVER.
(-DGMB SUFFIX PART NO.) ABS UL94-HB, SERVICE TEMPERATURE RANGE: -40°C TO +80°C, DARK GRAY BODY & COVER.

NOTES:
1.) FOUR (4) M4 STAINLESS STEEL SCREWS SUPPLIED FOR ASSEMBLY OF COVER TO BODY.
2.) BOXES DESIGNED TO MEET FOLLOWING STANDARDS:
NEMA 1, 2, 4, 4X, 12, 13 AND IEC529-IP66 REQUIREMENTS.
3.) ALL HOLE DIAMETERS HAVE ±.005[.12] TOLERANCE.
ALL OTHER DIMENSIONS HAVE ±.015[.38] TOLERANCE.
4.) ALL OUTSIDE DRAFT ANGLE: 1°
ALL INSIDE DRAFT ANGLE: 1/2°
5.) DIMENSIONS ARE INCH[MM]