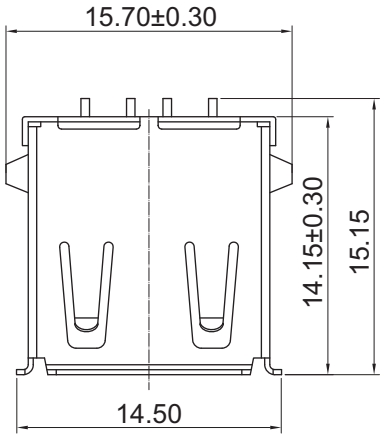

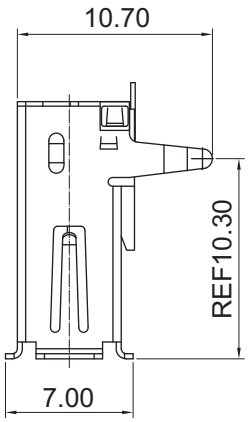

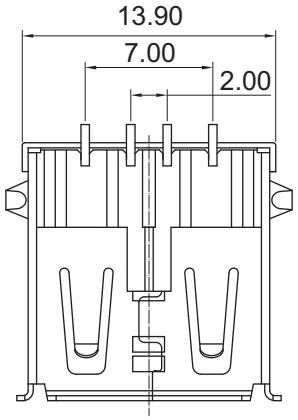

Material:
- Insulator: LCP + 30% G.F. UL 94V-0 Black
- Contact: Phosphor Bronze
- Shell: Brass
- Shell Plating: Nickel over all plating

Contact plating:
- Contact Area: 5μ" gold over Nickel plating
- Solder Tails Area: Tin over Nickel plating

Electrical:
- Current Rating: 1.5A Max.
- Contact Resistance: 30 m ohms Max.
- Insulation Resistance: 1000 M ohms min.
- Dielectric Withstanding voltage: 500 VAC
- Operating Temperature: -55°C ~ +85°C

* Solder temperature max. 260°C - acc. JEDEC standard

PACKING: Tray

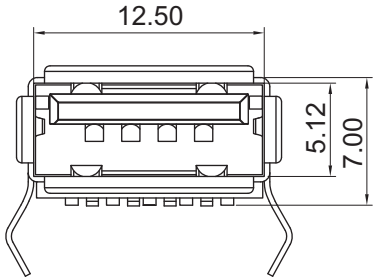

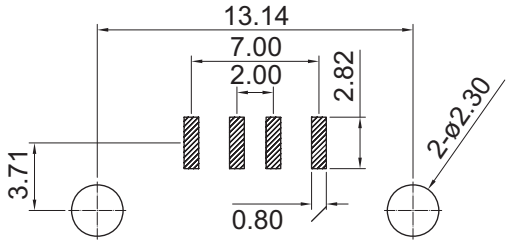

RECOMMENDED P.C.B. PATTERN LAYOUT

Unit: mm

RoHS Compliant

Scale	Free
TOLERANCE	
X.X	±0.38
X.XX	±0.25
X.XXX	±0.13
X.X°	±2°
X.XX°	±1°
X.XXX°	±0.5°
Angle	TOL

Id.	Modification	Date	Name
②	Updated Specification Material, Plating and Electrical data.	11.12.12	Wilson
①	Changed 'Insulator: LCP+30% G.F.,UL94-V-O, Black'to'PCB' Changed Temperature Range from '55°~+85°C'to'-55°C'	01.01.12	Chappell

	Date	Name
Drawn	04.13.12	Miller
Approved	11.12.12	Hellwig/Groll

ASSMANN WSW components

1840 W. Drake Drive, Suite 101 • Tempe, AZ 85283
Toll Free: 1-877-277-6266 • Email: info@assmann.us

Title: USB 1.1 Connector SMT for PCB mount, A type female

ASSMANN WSW-No.: AU-Y1006-R

Drawing-No.:

rev02

Replace

Sheet 1/1