- -55 to +125°C Temp Range
- Industry Std. Footprint
- Pb Free/RoHS Compliant

# CSM-7X-DU
## SMD CRYSTAL

### OPERATING CONDITIONS / ELECTRICAL CHARACTERISTICS

| PARAMETERS | CONDITIONS | CSM-7X-DU | | | UNITS |
|---|---|---|---|---|---|
| | | MIN | TYP | MAX | |
| Frequency Range | | 3.57 | | 70.000 | MHz |
| Frequency Tolerance | at +25°C | | | ± 30 | ppm |
| Frequency Stability | -55 to +125°C | | | ± 100 | ppm |
| Shunt Capacitance | | | | 7 | pF |
| Load Capacitance | Specify in P/N | 10 | 20 | Series | pF |
| Drive Level | | | | 500 | µW |
| Operating Temperature | | -55 | | +125 | °C |
| Storage Temperature | | -55 | | +125 | °C |
| Aging (Per Year) | @ +25°C ±3°C | | | ±5 | ppm |

### EQUIVALENT SERIES RESISTANCE/MODE OF OSCILLATION

| FREQUENCY RANGE (MHz) | MODE OF OSC | MAX ESR Ω | FREQUENCY RANGE (MHz) | MODE OF OSC | MAX ESR Ω |
|---|---|---|---|---|---|
| 3.57 ~ 4.999 | Fundamental | 150 | 13.000 ~ 19.999 | Fundamental | 40 |
| 5.000 ~ 5.999 | Fundamental | 100 | 20.000 ~ 30.000 | Fundamental | 30 |
| 6.000 ~ 6.999 | Fundamental | 80 | 26.000 ~ 39.999 | 3rd Overtone | 100 |
| 7.000 ~ 8.999 | Fundamental | 60 | 40.000 ~ 70.000 | 3rd Overtone | 80 |
| 9.000 ~ 12.999 | Fundamental | 50 | | | |

### DIMENSIONS (mm)

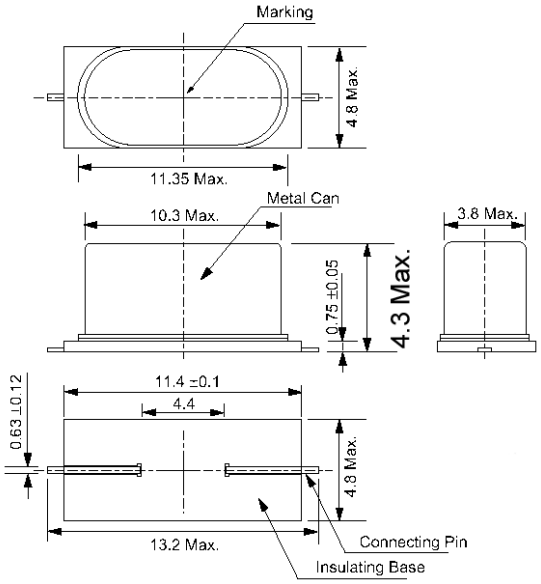


*Figure 1) Top, Side, Bottom and End views*

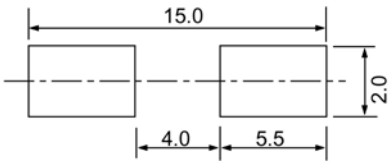


*Figure 2) Suggested Land Pattern*

### PART NUMBERING GUIDE: Example ECS-200-20-5PXDU-TR

| ECS - Frequency Abbreviation | - Load Capacitance | - Package | Stability | Temperature | - Packaging |
|---|---|---|---|---|---|
| 200 = 20.000 MHz<br>See P/N Guide | 20 =20 pF<br>S=Series | 5PX = CSM-7X | D= ± 100 ppm | U= -55 ~ +125°C | TR= Tape<br>& Reel<br>1K/Reel |

1105 South Ridgeview Road • Olathe, KS 66062 • Phone: 913.782.7787 • Fax: 913.782.6991 • www.ecsxtal.com