REVISIONS			
REV	DESCRIPTION	DATE	APPROVED
01 1	REVISED	BMH 2/24/97	2/24/97

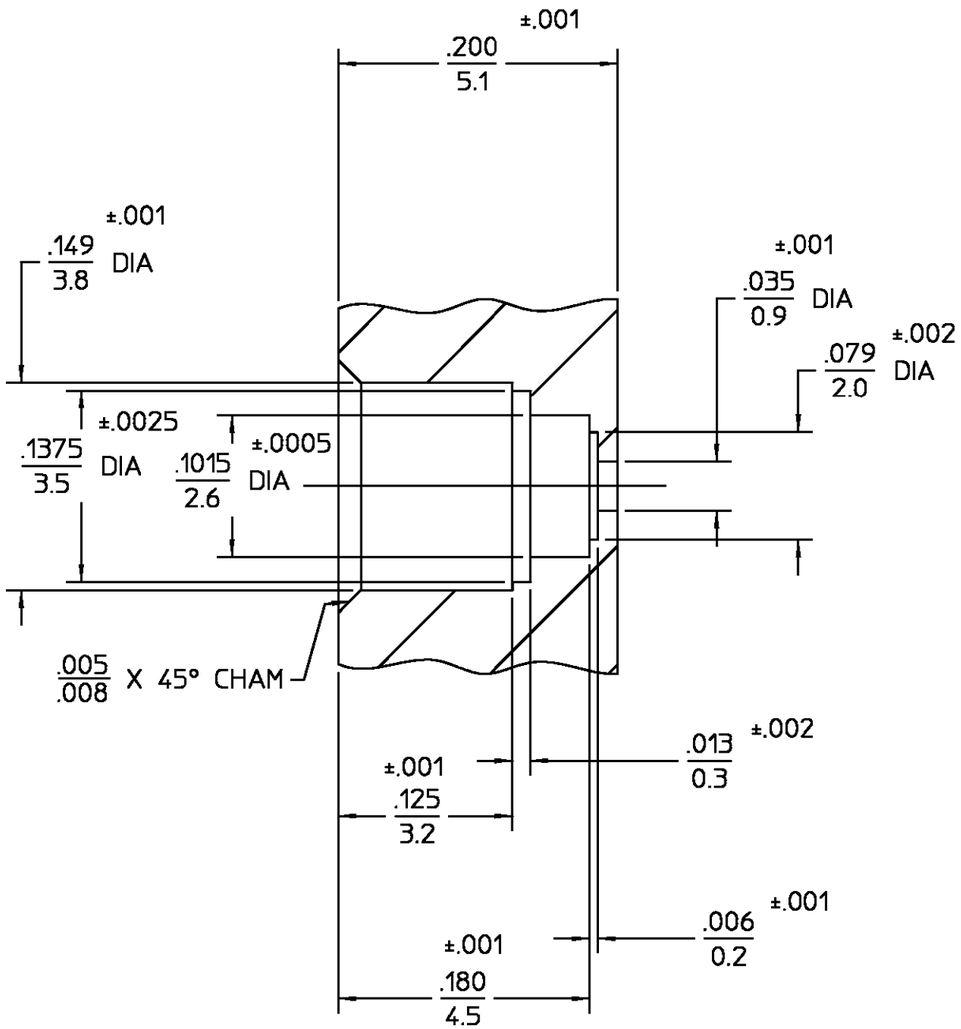

RECOMMENDED MOUNTING HOLE

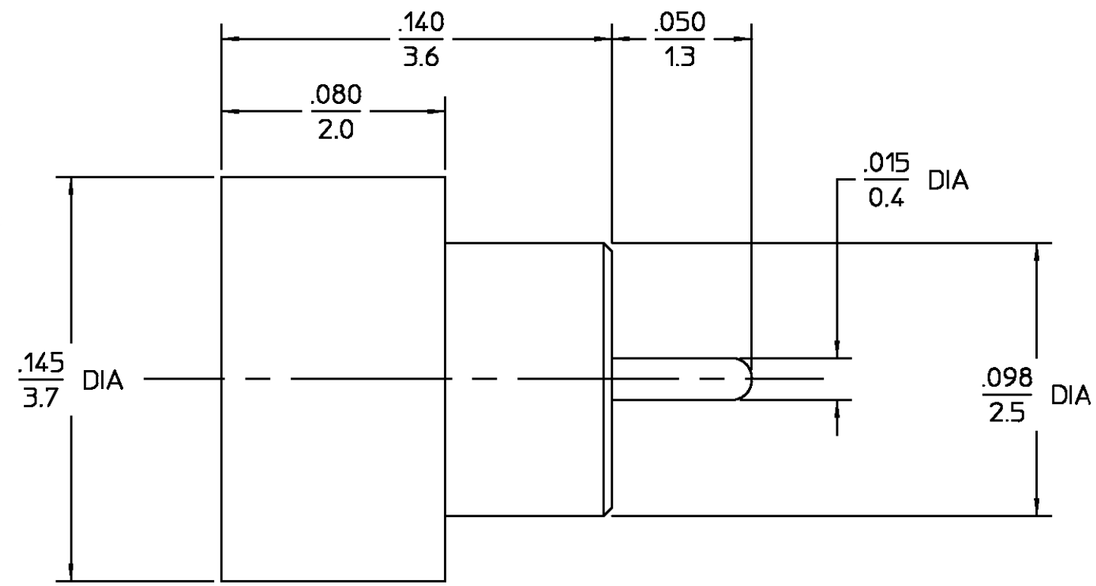

COMPONENT	MATERIAL	FINISH
CONTACT EXT HOUSING	IRON NICKEL COBALT SEALING ALLOY (KOVAR) PER ASTM F15-78	GOLD PLATE PER MIL-G-45204
DIELECTRIC	CORNING GLASS 7070	N/A

UNLESS OTHERWISE SPECIFIED DIMENSIONS ARE IN INCHES
TOLERANCE ON
FRAC. ± 1/64 DEC. ±.005 ANGLES ± 1°

DRAWN BY DATE 1/30/95
CHECKED BY
APP'D BY 8/23/95

AMP Incorporated
140 Fourth Avenue
Waltham, MA 02451-7599

These drawings and specifications are the property of M/A-COM Interconnect Division and shall not be reproduced or copied or used in whole or in part as the basis for the manufacture or sale of item(s) without written permission.

USE ASS'Y PROCEDURE

NO. A.P. N/A

TITLE OSMP SOLDER-IN SHROUD SMOOTH BORE

SIZE	CODE IDENT NO.		REV
B	26805	2998-5056-94	011
SCALE 20=1			SHEET 1 OF 1

.XXX = in
XX.X = mm

CUSTOMER DRAWING

AMP PART # 1056752-1
SHEET 1 OF 1 REV A