- Low Voltage HCMOS
- Industry Standard Footprint
- PLL technology
- RoHS Compliant

ECS-P8F3X/P8F5X

SMD PROGRAMMABLE OSCILLATOR

ECS-P8F3X (3.3V) and ECS-P8F5X (5V) J-Lead SMD PLL based programmable crystal oscillators.

OPERATING CONDITIONS / ELECTRICAL CHARACTERISTICS

PARAMETERS	CONDITIONS	ECS-P8F3X (+3.3V)			ECS-P8F5X (+5V)			UNITS
		MIN	TYP	MAX	MIN	TYP	MAX	
Frequency Range		1.000		125.000	1.000		150.000	MHz
Operating Temperature	Standard	-10		+70	-10		+70	°C
	Extended (N Option)	-40		+85	-40		+85	°C
Storage Temperature		-55		+125	-55		+125	°C
Supply Voltage		+2.97	+3.3	+3.63	+4.5	+5.0	+5.5	VDC
Frequency Stability *	Option A			± 100			± 100	ppm
	Option B			± 50			± 50	ppm
Input Current				28			45	mA
Output Disable Current	Pin 1 = VIL			16			30	mA
Output Symmetry	@ 50% Vcc level			40/60			40/60	%
Rise and Fall Times	20% Vcc to 80%Vcc level			4			4	ns
Jitter	1.0 ~ 33.0 MHz		±100	±250		±100	±250	pS p-p
	>33.1 MHz		±50	±100		±50	±100	pS p-p
"0" level	VOL			0.4			0.4	VDC
"1" level	VOH	2.7			Vcc-0.5			VDC
Output Load (HCMOS)	1.0 ~ 50.0 MHz			30			50	pF
	> 50.1 MHz			15			15	pF
Enable/Disable Time				150			100	ns
Start-Up Time				10			10	ms
Aging	@ +25°C ±3°C, First year			± 5			± 5	ppm

* Note: Inclusive of 25°C tolerance, operating temperature,input voltage change, load change, shock and vibration.

DIMENSIONS (mm)

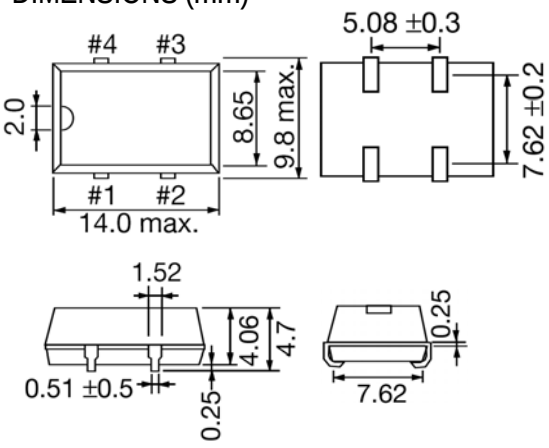

Figure 1) Top, Side, Bottom and End views

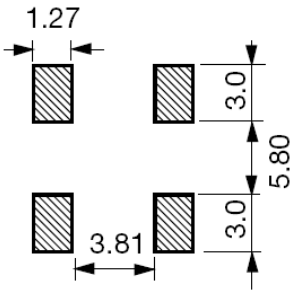

Figure 2) Suggested Land Pattern

ECS-P8F3X (3.3V) Tri-State Control Voltage	
Pad 1	Pad 3
Open	Oscillation
2.0V Min.	Oscillation
0.7V Max.	No Oscillation

ECS-P8F5X (5V) Tri-State Control Voltage	
Pad 1	Pad 3
Open	Oscillation
2.0V Min.	Oscillation
0.8V Max.	No Oscillation

Pin Connections	
Pin #1	Tri-State
Pin #2	Ground
Pin #3	Output
Pin #4	Vcc

PART NUMBERING GUIDE: Example ECS-P8F3X-20.000-AN

ECS -	Series -	Frequency -	Stability	Temperature
	P8F3X = +3.3V P8F5X = +5.0V	20.000 = 20.000 MHz	A = ± 100 ppm B = ± 50 ppm	Blank = -10 ~ +70°C N = -40 ~ +85°C

1105 South Ridgeview Road • Olathe, KS 66062 • Phone: 913.782.7787 • Fax: 913.782.6991 • www.ecsxtal.com