THIS COPY IS PROVIDED ON A RESTRICTED BASIS AND IS NOT TO BE USED IN ANY WAY DETRIMENTAL TO THE INTERESTS OF PANDUIT CORP.

PANDUIT PART NUMBER	STUD SIZE	DIMENSIONS in.				
		A ±.04	W ±.01	C ±.02	M ±.04	H ±.01
PN10-6F	#6	1.00 (25.40)	.31 (7.87)	.22 (5.59)	.81 (20.57)	.15 (3.81)
PN10-8F	#8	1.03 (26.16)	.37 (9.40)	.22 (5.59)	.81 (20.57)	.17 (4.32)
PN10-10F	#10	1.04 (26.42)	.37 (9.40)	.22 (5.59)	.81 (20.57)	.20 (5.08)
PN10-14F	1/4"	1.14 (28.96)	.49 (12.45)	.30 (7.62)	.90 (22.86)	.27 (6.86)

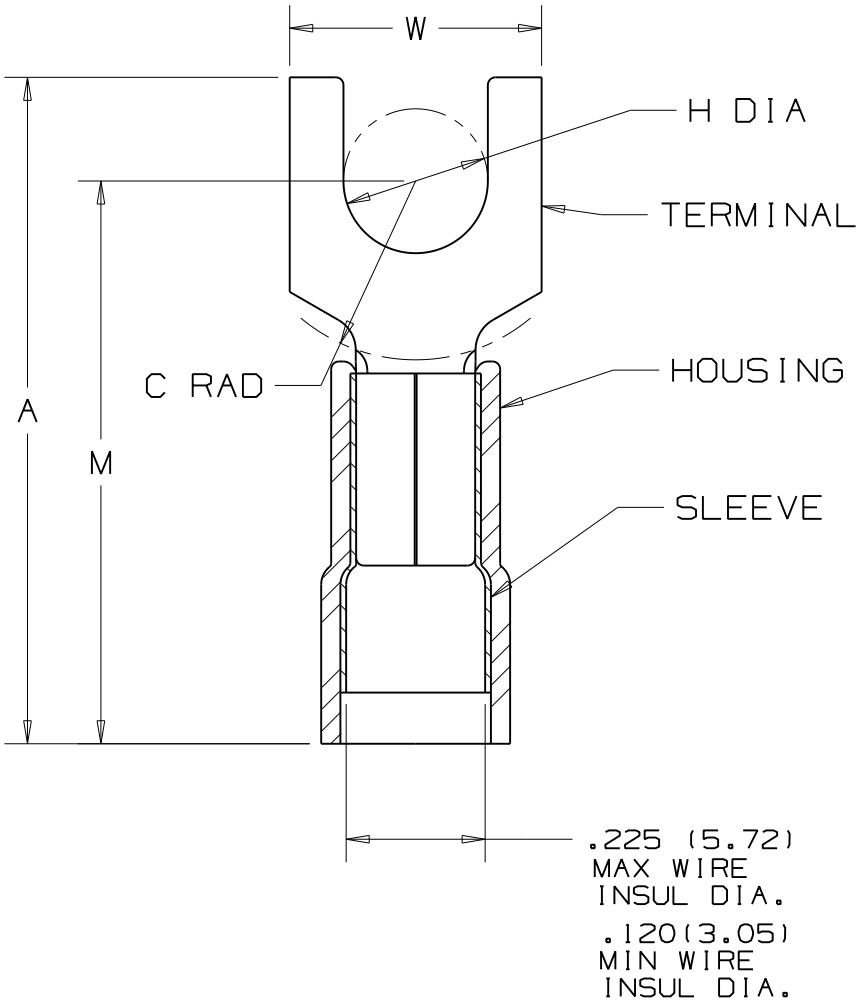

NOTES:

1. UL LISTED AND CSA CERTIFIED FOR:
   A. 600V. MAX. BLDG WIRE (1000 V. MAX IN SIGNS, FIXTURES & LUMINARIES)
   B. #14-10 AWG SOLID OR STRANDED COPPER WIRE WITH THE CT-550 INSTALLATION TOOL.
   C. #12-10 AWG STRANDED AND #12 AWG SOLID COPPER WIRE WITH THE CT-1550 AND CT-1551 INSTALLATION TOOLS.
   D. #12-10 AWG SOLID OR STRANDED COPPER WIRE WITH THE CT-100 INSTALLATION TOOL.
   E. 221°F (105°C) MAX TEMP. RATING
2. MATERIAL:
   A. STAMPING - .04" (1.02) THK COPPER, TIN PLATED
   B. HOUSING - NYLON, YELLOW
   C. SLEEVE - BRASS, TIN PLATED
3. STRIP LENGTH - $9/32\ ^{+1/32}_{-0}$
4. SEE www.panduit.com FOR PART NUMBER SUFFIX DESIGNATION FOR PACKAGE SIZE.
5. DIMENSIONS IN BRACKETS ARE IN MILLIMETERS

LISTED 587H E52164

CERTIFIED LR31212

REV	DATE	BY	CHK	DESCRIPTION	ECN #	CUST	PM
05	5/11	SB		UPDATED NOTE #4			

PANDUIT CORP. TINLEY PARK, ILLINOIS

3PC. NYLON INSULATED, 12-10 BARREL, FORKS

DRAWN BY	CHK'D	SCALE	DRAWING NO.
FES	LA	NONE	A41190