THIS DRAWING IS UNPUBLISHED. RELEASED FOR PUBLICATION .19 .
© COPYRIGHT 19 BY AMP INCORPORATED. ALL RIGHTS RESERVED.

LOC	DIST
AA	28

REVISIONS

P	LTR	DESCRIPTION	DATE	DWN	APVD
	A	REVISED; EC 0U1C-0095-99	03NOV99	DLD	ECL

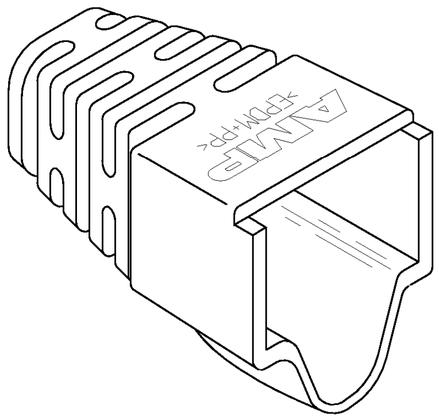

△1 MATERIAL: ELASTOMER POLYOLEFIN, SEE TABLE FOR COLOR.

△2 DIMENSIONS ARE NOMINAL UNLESS OTHERWISE SPECIFIED.

3. BOOT DESIGNED TO FIT CABLE DIAMETER OF .250 NOMINAL, AMP SHIELDED MODULAR PLUGS AND EXTERNAL STRAIN RELIEF 558527-3.

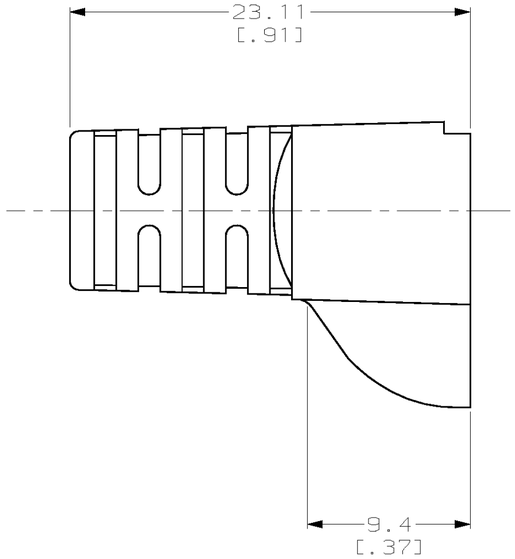

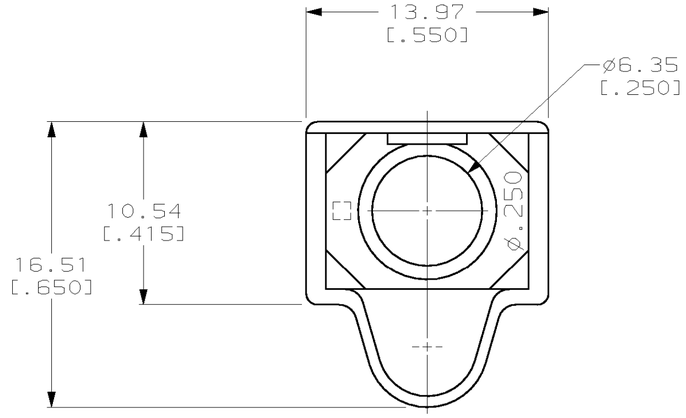

COLOR	PART NUMBER
NEMA GY	1-569877-0
VIOLET	569877-9
WHITE	569877-8
ORANGE	569877-7
YELLOW	569877-6
BLUE	569877-5
GREEN	569877-4
RED	569877-3
LT ALMOND	569877-2
BLACK	569877-1

THIS DRAWING IS A CONTROLLED DOCUMENT FOR AMP INCORPORATED. IT IS SUBJECT TO CHANGE AND THE CONTROLLING ENGINEERING ORGANIZATION SHOULD BE CONTACTED FOR THE LATEST REVISION.

DIMENSIONS: mm [INCHES]

TOLERANCES UNLESS OTHERWISE SPECIFIED:
0 PLC ±-
1 PLC ±-
2 PLC ±-
3 PLC ±-
4 PLC ±-
ANGLES ±-
△2

MATERIAL △1

FINISH –

DWN DL DRUMMOND 22 FEB 96
CHK D. AHERON 07 MAR 96
APVD B. ANTHONY 07 MAR 96

PRODUCT SPEC –
APPLICATION SPEC –
WEIGHT –

CUSTOMER DRAWING

AMP Incorporated
Harrisburg, PA 17105-3608

NAME BOOT, HOODED, ø.250

SIZE	CAGE CODE	DRAWING NO
A2	00779	C-569877

SCALE	SHEET	OF	REV
4:1	1	1	A

569877

AMP 1471-9 REV 09MAY94