PART NUMBER	ITEM ① NUT	ITEM ② BODY	ITEM ③ BODY	ITEM ④ INSULATOR	ITEM ⑤ CONTACT
29-3840	BRASS NICKEL PLATED	BRASS NICKEL PLATED	BRASS NICKEL PLATED	PTFE N/A	BERYLLIUM GOLD PLATED

DRAWING NO.
29-3840

REVISIONS

01	OFFICIAL RELEASE			
	08-18-09	W	W	T

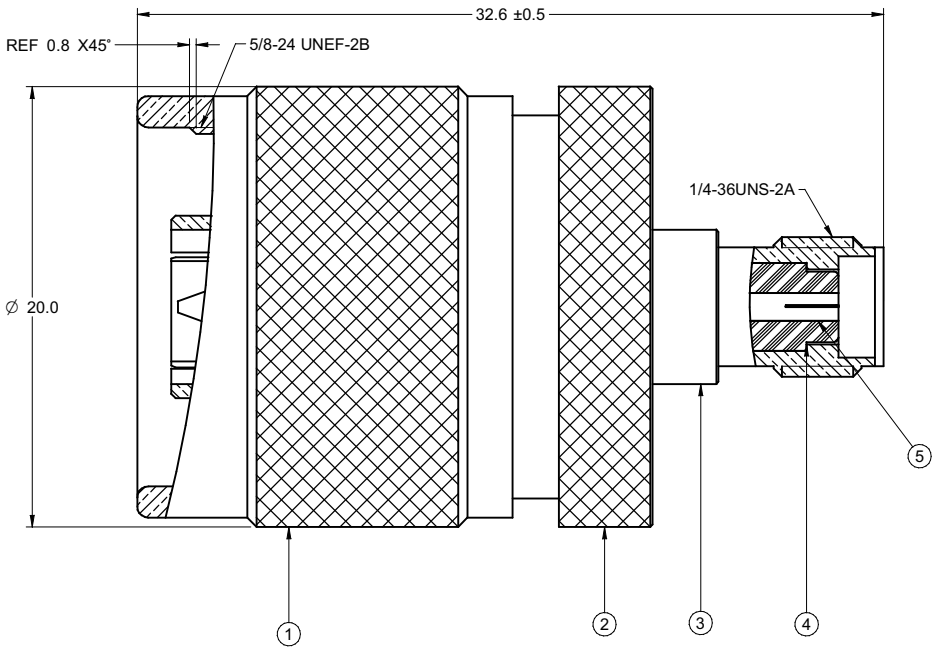

受控 CONTROLLED DOCUMENT					
编号 P/N	29-3840	版本 Rev	01	日期 Rel'd Date	SEP 17,09

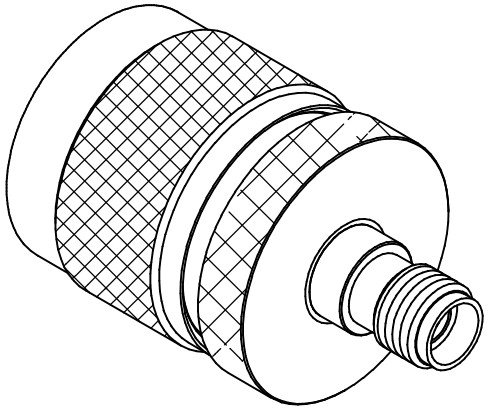

NOTES:

1. ELECTRICAL SPECIFICATIONS
   N IMPEDANCE: 50 OHM
   SMA IMPEDANCE: 50 OHM
   WORKING VOLTAGE:500 VOLTS RMS AT SEA LEVEL
   DIELECTRIC WITHSTANDING VOLTAGE:1500 VOLTS RMS AT SEA LEVEL
   INSULATION RESISTANCE: 5000 MEGOHMS MIN

2. ENVIRONMENTAL SPECIFICATIONS
   TEMPERATURE RANGE: -55 ℃ TO +85℃

3. MECHANICAL CHARACTERISTICS:
   DURABILITY: 500 CYCLES

4. N END TECHNICAL DETAIL: REFER TO EMERSON DOCUMENT P/N 26-0000

THIS DRAWING TO BE INTERPRETED PER ANSI Y 14.5M - 1994

COMPANY CONFIDENTIAL

TOLERANCE UNLESS OTHERWISE SPECIFIED		DRAWN BY IVON.WANG	DATE 08-18-09
DECIMALS	mm	CHECKED BY BETTY.YU	DATE 08-18-09
X	± 0.5		
X.X	± 0.2	APPROVED BY THOMAS	DATE 08-18-09
X.XX	± 0.1		
ANGLES	± 0.5°	U/M mm	

THIS DRAWING WAS PRODUCED BY COMPUTER, DO NOT SCALE DRAWING OR UPDATE MANUALLY.

EMERSON Network Power — Connectivity Solutions

TITLE
CPAD810 SMA(F)-N(M) ADAPTER

SHEET	DRAWING NO.	SIZE
1 OF 1	29-3840	C