Feb.1.2018 Copyright 2018 HIROSE ELECTRIC CO., LTD. All Rights Reserved.

	COUNT	DESCRIPTION OF REVISIONS	BY	CHKD	DATE		COUNT	DESCRIPTION OF REVISIONS	BY	CHKD	DATE
△					. .	△					. .
△					. .	△					. .
△					. .	△					. .

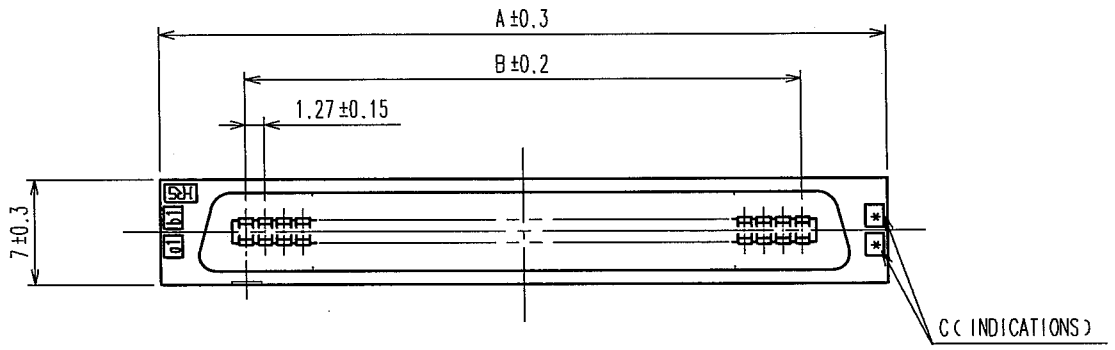

RECOMMENDEND PC BOARD HOLE PATTERN(MOUNTING SIDE)
t=1.6

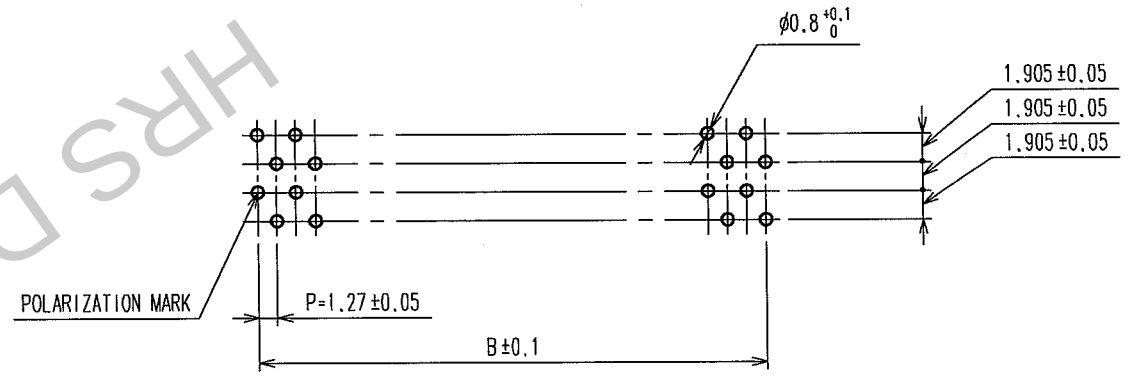

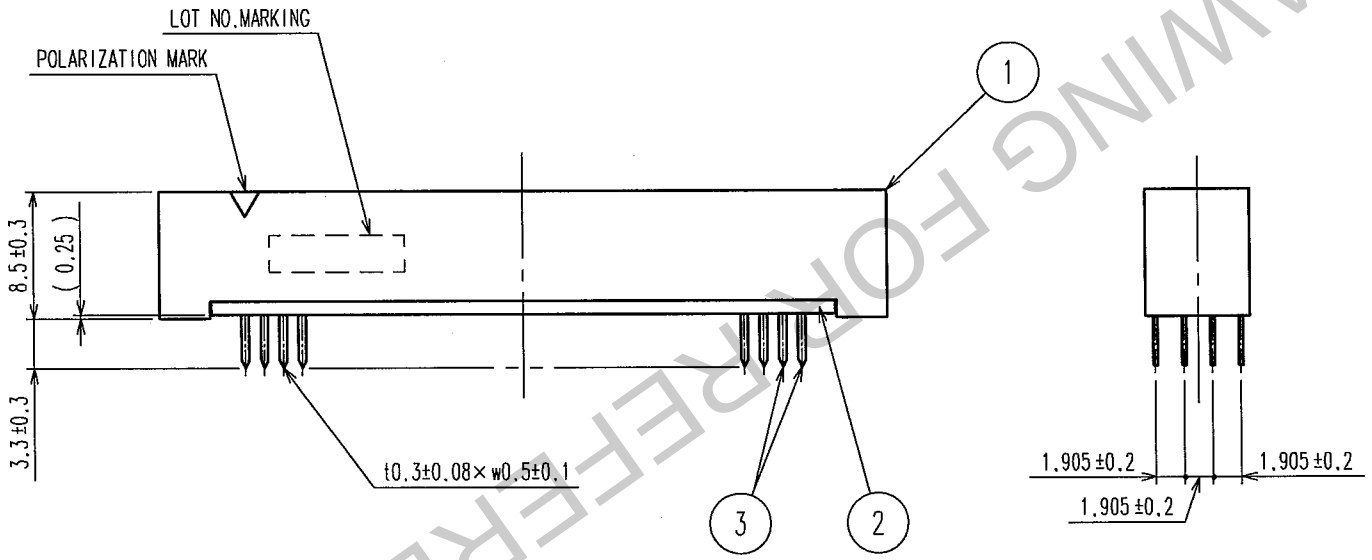

PART No.	CODE No.	2	A	B	C
FX2C-20P-1.27DSA(71)	CL572-2201-8-71	20	22.75	11.43	10
FX2C-32P-1.27DSA(71)	CL572-2202-0-71	32	30.37	19.05	16
FX2C-40P-1.27DSA(71)	CL572-2203-3-71	40	35.45	24.13	20
FX2C-52P-1.27DSA(71)	CL572-2204-6-71	52	43.07	31.75	26
FX2C-60P-1.27DSA(71)	CL572-2205-9-71	60	48.15	36.83	30
FX2C-68P-1.27DSA(71)	CL572-2206-1-71	68	53.23	41.91	34
FX2C-80P-1.27DSA(71)	CL572-2207-4-71	80	60.85	49.53	40
FX2C-100P-1.27DSA(71)	CL572-2208-7-71	100	73.55	62.23	50
FX2C-120P-1.27DSA(71)	CL572-2209-0-71	120	86.25	74.93	60

NOTES 1. THE DIMENSIONS IN PARENTHESES ARE FOR REFERENCE.
2 NUMBER OF PIN.

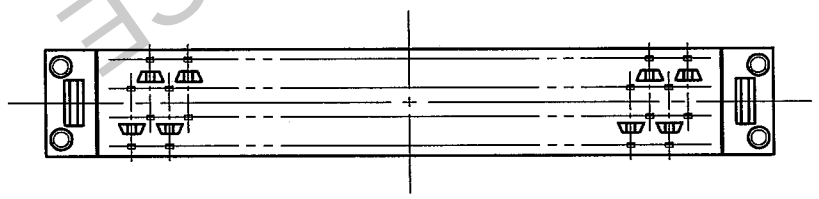

NO.	MATERIAL	FINISH, REMARKS
2	POLYAMIDE	BLACK UL94V-0
1	POLYAMIDE	BLACK UL94V-0

NO.	MATERIAL	FINISH, REMARKS
3	PHOSPHOR BRONZE	CONTACT AREA:GOLD 0.2μm min DIP AREA:TIN-PLATING 2μm min UNDER PLATING:NICKEL 2μm min

CODE NO.(OLD)	DRAWN	DESIGNED	CHECKED	APPROVED	RELEASED
CL	I.OKAYAMA 04.06.02	K.NAKAMURA 04.06.02	H.OKAWA 04.06.09	H.OKAWA 04.06.09	. .

SCALE FREE
UNITS mm
DRAWING NO. EDC3-083045-21
HRS HIROSE ELECTRIC CO., LTD
PART NO. FX2C-**P-1.27DSA(71)
CODE NO. CL572
1/1

TO
PCK

HRS DRAWING FOR REFERENCE