THIS DRAWING IS UNPUBLISHED. RELEASED FOR PUBLICATION 20
© COPYRIGHT 20 Tyco Electronics AMP GmbH ALL RIGHTS RESERVED.

LOC	DIST
FT	0

REVISIONS

P	LTR	DESCRIPTION	DATE	DWN	APVD
	C1	REVISED PER ECO-12-007964	02MAY2012	KH	MS

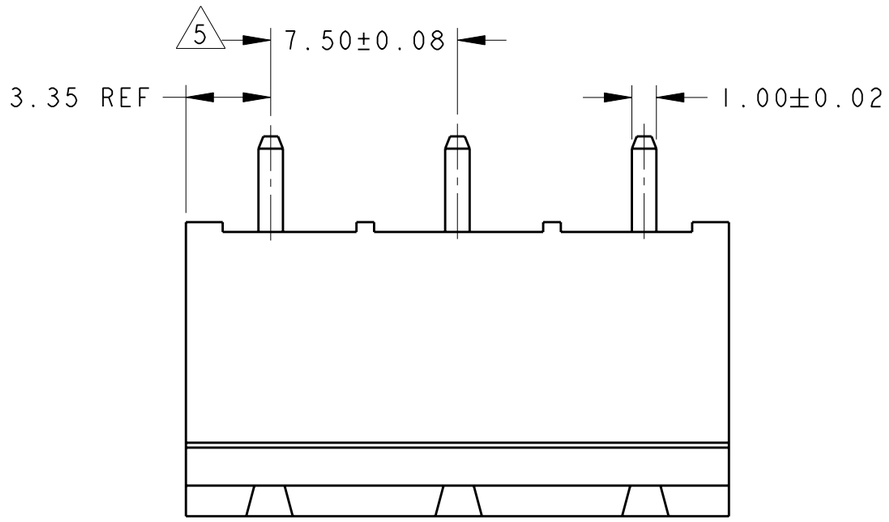

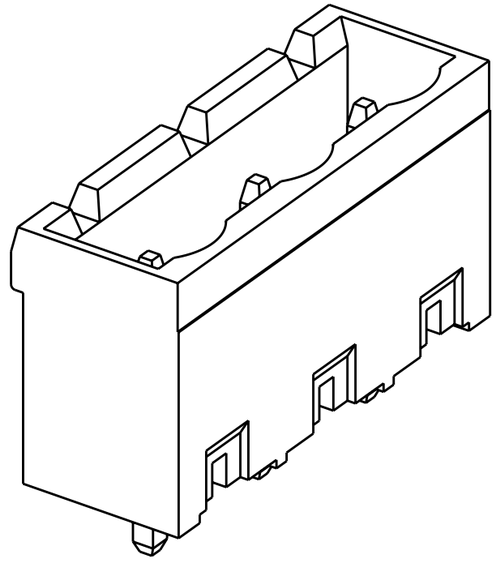

282964-3 AS SHOWN

1. MATERIALS AND FINISH
   HOUSING: PA 6-6, UL 94-V0, COLOR GREEN.
   TERMINAL: COPPER ALLOY, TIN PLATED.
2. SUITABLE FOR 1,6-2,4mm PC BOARD THICKNESS.
3. RECOGNIZED UNDER THE COMPONENT PROGRAM OF UNDERWRITERS LABORATORIES INC. FILE N° E60677.
4. IMQ CERTIFICATE WITH SURVEILLANCE IN CONFORMITY WITH IEC 998-1/998-2-1.
5. NOT CUMULATIVE TOLERANCE.

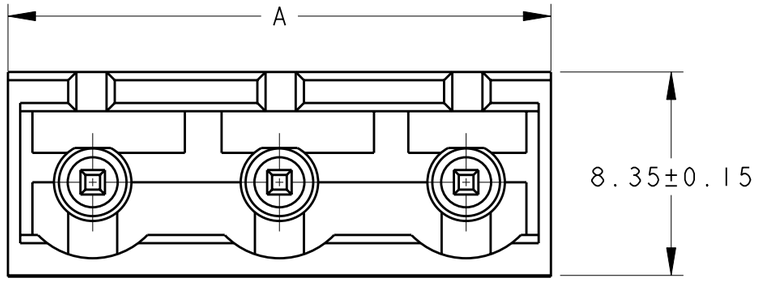

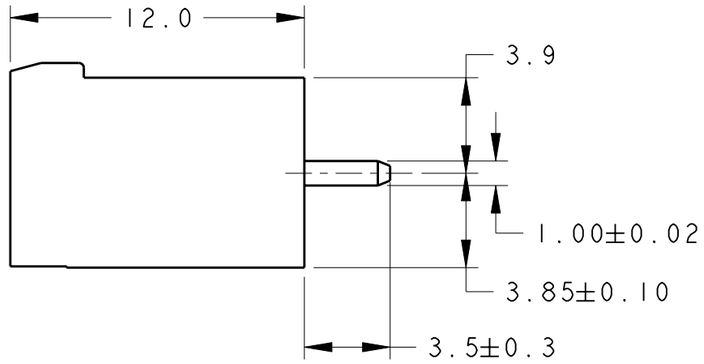

DIM. A	N° OF POS.	PART NUMBER
89.20	12	1-282964-2
81.70	11	1-282964-1
74.20	10	1-282964-0
66.70	9	282964-9
59.20	8	282964-8
51.70	7	282964-7
44.20	6	282964-6
36.70	5	282964-5
29.20	4	282964-4
21.70	3	282964-3
14.20	2	282964-2

RECOMMENDED PC BOARD LAYOUT

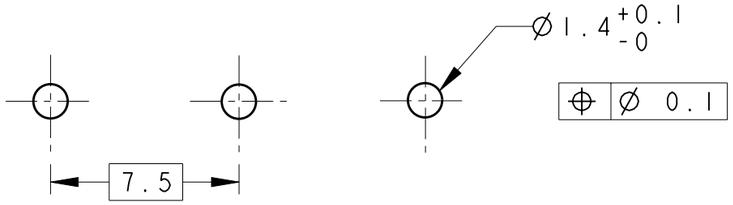

THIS DRAWING IS A CONTROLLED DOCUMENT.

DIMENSIONS: mm

TOLERANCES UNLESS OTHERWISE SPECIFIED:

0 PLC	±-
1 PLC	±.3
2 PLC	±.25
3 PLC	±-
4 PLC	±-
ANGLES	±2

MATERIAL 1 -

FINISH 1 -

DWN	E.ZANOLINI	14DEC2001
CHK	D. BIEVENOUR	14DEC2001
APVD	D. BIEVENOUR	14DEC2001

PRODUCT SPEC 108-20166

APPLICATION SPEC 114-20079

WEIGHT -

TE Connectivity

NAME TERMINAL BLOCK, HEADER ASSEMBLY
180 DEGREE CLOSED ENDS
7.5mm PITCH

SIZE	CAGE CODE	DRAWING NO	RESTRICTED TO
A3	00779	C-282964	-

CUSTOMER DRAWING

SCALE 4:1 SHEET 1 OF 1 REV C1

1470-19 (3/11)

Pro/ENGINEER DRAWING