THIS DRAWING AND THE SUBJECT MATTER SHOWN THEREON ARE CONFIDENTIAL AND THE PROPERTY OF BEL/STEWART/TRP CONNECTOR AND SHALL NOT BE REPRODUCED, COPIED, OR USED IN ANY MANNER WITHOUT THE WRITTEN CONSENT OF TRP CONNECTOR.

PRODUCT MAY BE PROTECTED BY ONE OR MORE OF THE FOLLOWING US PATENTS:
5736910 5939955 6425781 6428361 6554638 6840817 7123117
7429195 7717749 7808751 6217391 6149050 7924130

REVISIONS

P	LTR	DESCRIPTION	DATE	DWN	APVD
	K	EC-1411035 COMPANY LOGO CHANGE	08JAN2015	HY	KZ

MECHANICAL:

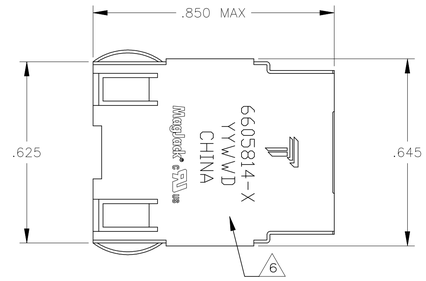

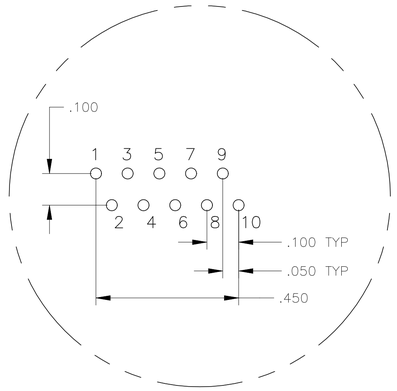

Pin Designations

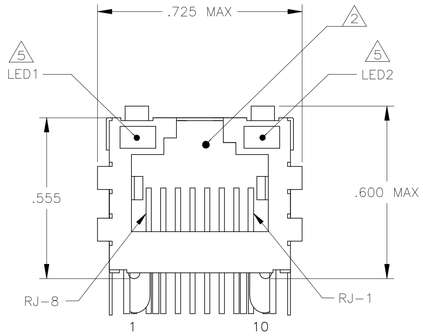

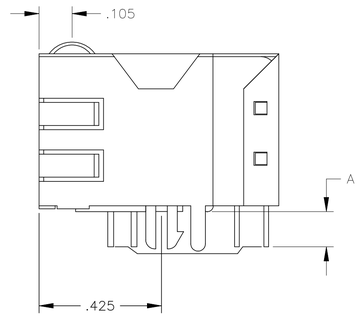

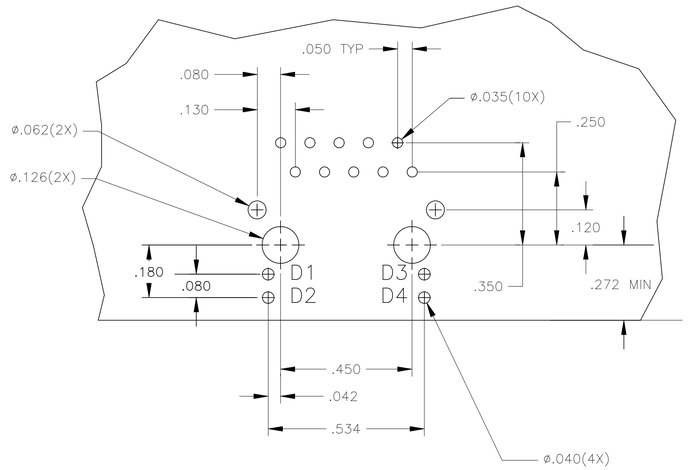

Suggested PCB Layout
(Component Side)

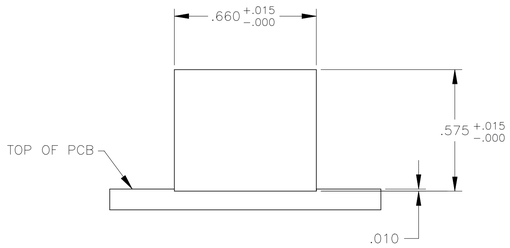

Suggested Panel Cutout

7G05 SERIES GIGABIT CIRCUIT 3 4

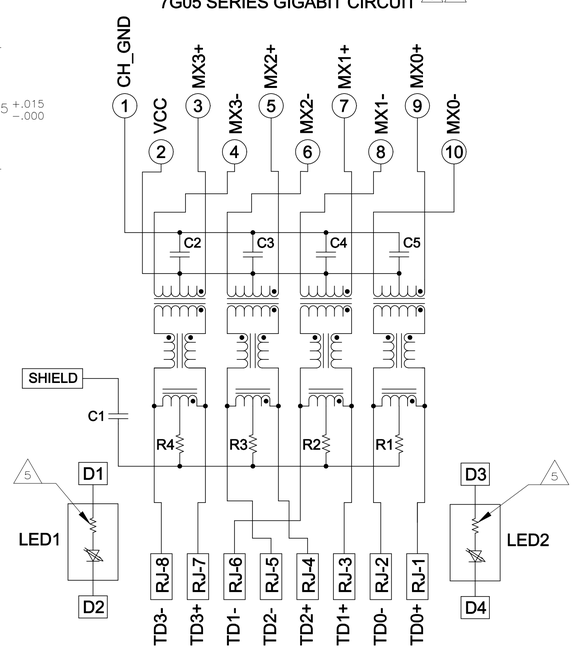

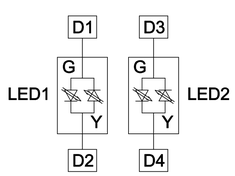

LED CONFIGURATION
FOR 6605814-6 ONLY

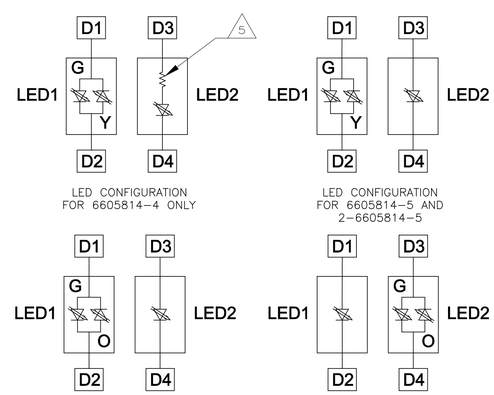

C1=1000 pF, 2kV CAPACITOR

R1-R4 = 75 OHMS, 1/16 W RESISTORS

C2-C5 = 0.1 uF, 50V, X7R CAPACITORS

1. MATERIALS:
HOUSING - THERMOPLASTIC PET POLYESTER FLAMMABILITY RATING UL 94V-0.
SHIELD - .010" THICK, C26800 BRASS PREPLATED WITH 30µ inch MIN SEMI-BRIGHT NICKEL;
SOLDER TABS POST-DIPPED WITH 100µ inch MIN SAC SOLDER.
MOD JACK CONTACTS - .0157" x .018" THICK, PHOSPHOR BRONZE, 50µ inch MIN OVERALL NICKEL UNDERPLATE, WITH SELECT 50µ inch MIN HARD GOLD FINISH PLATE.
SOLDERTAILS WITH 100µ inch MIN MATTE TIN AND/OR SAC SOLDER DIP.
LIGHT EMITTING DIODE(LED) - DIFFUSED EPOXY LENS, .020" x .020" CARBON STEEL WIREFRAME LEADS PREPLATED WITH 80µ inch SILVER OVER 40µ inch NICKEL UNDERPLATE OVER 40µ inch COPPER UNDERPLATE; POST-PLATED WITH 100µ inch MIN MATTE TIN AND/OR SAC SOLDER DIP OR PURE TIN SOLDER DIP.

2. RJ45 JACK CAVITY CONFORMS TO FCC RULES AND REGULATIONS PART 68, SUB PART F.

3. MAGNETICS
-APPLICATION: 10/100/1000 BASE-T
-IMPEDANCE: 100 OHMS
-TURNS RATIO (CHIP:CABLE): 1:1 ALL FOUR PAIRS
-OPEN CIRCUIT INDUCTANCE (OCL): 350µH MIN @100kHz, 0.1VRMS, 8mADC BIAS FROM 0°C TO 70°C, ALL FOUR PAIRS
-ALL FOUR PAIRS BI-DIRECTIONAL
-PERFORMANCE @ 25°C:
INSERTION LOSS (IL): 1.1dB MAX FROM 0.5MHz TO 100MHz
RETURN LOSS (RL): 18dB MIN FROM 0.5MHz TO 40MHz
12-20LOG(f/80)dB MIN FROM 40.1MHz TO 100MHz
CROSSTALK ATTENUATION: 35dB MIN FROM 0.5MHz TO 40MHz
33-20LOG(f/50)dB MIN FROM 40.1MHz TO 100MHz
COMMON MODE REJECTION RATIO (CMRR): 30dB MIN FROM 0.5MHz TO 100MHz
-ISOLATION VOLTAGE:2250VDC (MAX) FOR 60 SECONDS WITH A RISE TIME OF 500V/SEC.

4. THE MAGNETICS ARE SYMMETRICAL, AND SUPPORTS AUTO-MDI/MDIX.

5. THE 250 OHM LED RESISTORS ARE OPTIONAL, PLEASE SEE CHART FOR PRESENCE OR ABSENCE OF LED RESISTORS. IF THE LED WITHOUT 250 OHM RESISTORS, LED IS DRIVEN WITH CONSTANT CURRENT AT APPROX 20mA.
LED COLOR: DOMINANT WAVELENGTH (λ D): GREEN 568 nm TYP. at IF=20mA
FORWARD VOLTAGE (VF): GREEN 2.2V TYP. at IF=20mA
DOMINANT WAVELENGTH (λ D): YELLOW 588 nm TYP. at IF=20mA
FORWARD VOLTAGE (VF): YELLOW 2.1V TYP. at IF=20mA.
DOMINANT WAVELENGTH (λ D): ORANGE 605 nm TYP. at IF=20mA
FORWARD VOLTAGE (VF): ORANGE 2.1V TYP. at IF=20mA.

IF THE LED WITH 250 OHM RESISTORS,LED IS DRIVEN WITH 5V VOLTAGE AND THE MAX OPERATING CURRENT IS 20mA.
LED COLOR : DOMINANT WAVELENGTH (λ D): GREEN 568 nm TYP. At VF=5V
FORWARD CURRENT (IF): GREEN 12 mA TYP. at VF=5V
DOMINANT WAVELENGTH (λ D): YELLOW 588 nm TYP. At VF=5V
FORWARD CURRENT (IF): YELLOW 13 mA TYP. at VF=5V

6. TRP CONNECTOR LOGO, PART NUMBER, DATE CODE, COUNTRY OF ORIGIN AND AGENCY APPROVAL MARKING IN APPROXIMATE LOCATION SHOWN. DATE CODE: "YY" IS YEAR, "WW" IS WORK WEEK, "D" IS DAY OF WEEK, WITH SUNDAY=1

7. THE PART IS RECOMMENDED FOR WAVE SOLDERING PROCESS, PREHEAT TEMPERATURE IS 120°C TO 160°C, 120 SECONDS TO 180 SECONDS,PEAK WAVE SOLDERING TEMPERATURE IS 260°C MAX,10 SECONDS MAX.

OBSOLETE	.100±.010	GREEN/YELLOW	NO	GREEN	NO	~~2-6605814-5~~
OBSOLETE	.145±.010	GREEN	NO	GREEN/ORANGE	NO	~~1-6605814-8~~
OBSOLETE	.145±.010	YELLOW	NO	GREEN/ORANGE	NO	~~1-6605814-5~~
	.145±.010	GREEN/ORANGE	NO	YELLOW	NO	1-6605814-3
	.145±.010	GREEN	YES	GREEN	YES	1-6605814-1
	.145±.010	GREEN	NO	YELLOW	NO	6605814-8
	.145±.010	GREEN/YELLOW	NO	GREEN/YELLOW	NO	6605814-6
	.145±.010	GREEN/YELLOW	NO	GREEN	NO	6605814-5
OBSOLETE	.145±.010	GREEN/YELLOW	NO	GREEN	YES	~~6605814-4~~
OBSOLETE	.145±.010	YELLOW	YES	GREEN	YES	~~6605814-2~~
OBSOLETE	.145±.010	GREEN	YES	YELLOW	YES	~~6605814-1~~
	DIM 'A'	LED1	250 OHMS RESISTOR 5	LED2	250 OHMS RESISTOR 5	PART NUMBER

THIS DRAWING IS A CONTROLLED DOCUMENT.

DIMENSIONS: INCHES

TOLERANCES UNLESS OTHERWISE SPECIFIED:
0 PLC ± –
1 PLC ± –
2 PLC ± .010
3 PLC ± .005
4 PLC ± –
ANGLES ± –

PRODUCT SPEC 108-2100
APPLICATION SPEC –

DWN CLOUD.ZENG 29MAY2006
CHK MICHAEL.ZHANG 29MAY2006
APVD TEDDY.XIONG 29MAY2006

trp CONNECTOR a bel group — DONGGUAN CHINA

MODEL NAME: MAGJACK SINGLE NON-POE

DESC: 1X1 7G05 GIGABIT TAB UP W/ LED –

SIZE A1 | CAGE CODE | DRAWING NO C-6605814 | RESTRICTED TO –

CUSTOMER DRAWING | SCALE NTS | SHEET 1 OF 1 | REV K