PRODUCT N°	DIM"C"	DIM"D"	CONTACT PLACED IN CAVITY																						
95200–Y01LF	48.26	50.72	X	X	X				X	X	X	X	X	X	X	X				X	X	X			
95200–Y02LF	7.62	10.08	X		X																				
95200–Y03LF	53.34	55.80	X			X			X			X			X			X			X				X
95200–Y04LF	53.34	55.80	X	X		X	X	X	X	X	X	X	X	X	X	X	X	X	X	X	X	X	X	X	X
			1	2	3	4	5	6	7	8	9	10	11	12	13	14	15	16	17	18	19	20	21	22	

RoHS COMPATIBLE,
SEE NOTE 3

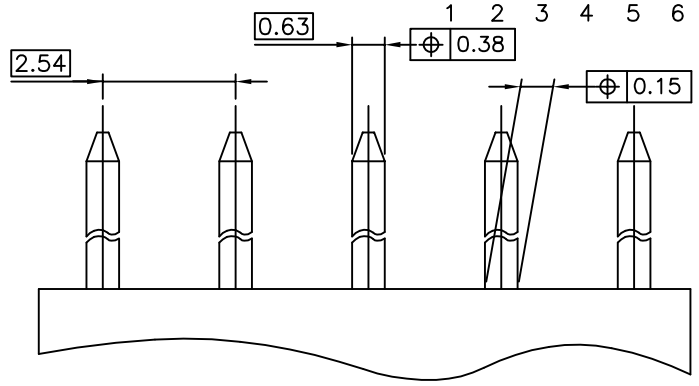

MINIMUM MATING PIN LENGTH: 5 mm.

RECOMMENDED PINS PATTERN

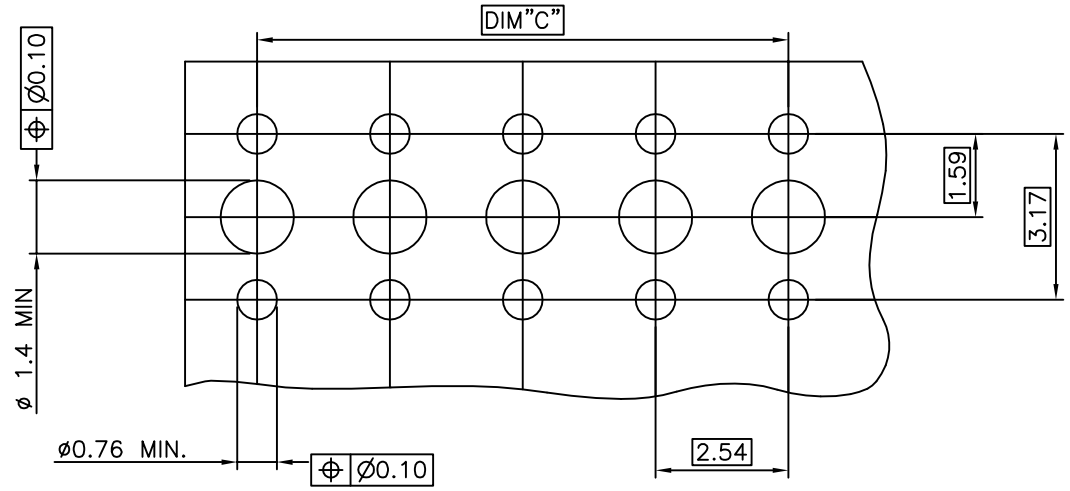

RECOMMENDED HOLE PATTERN.

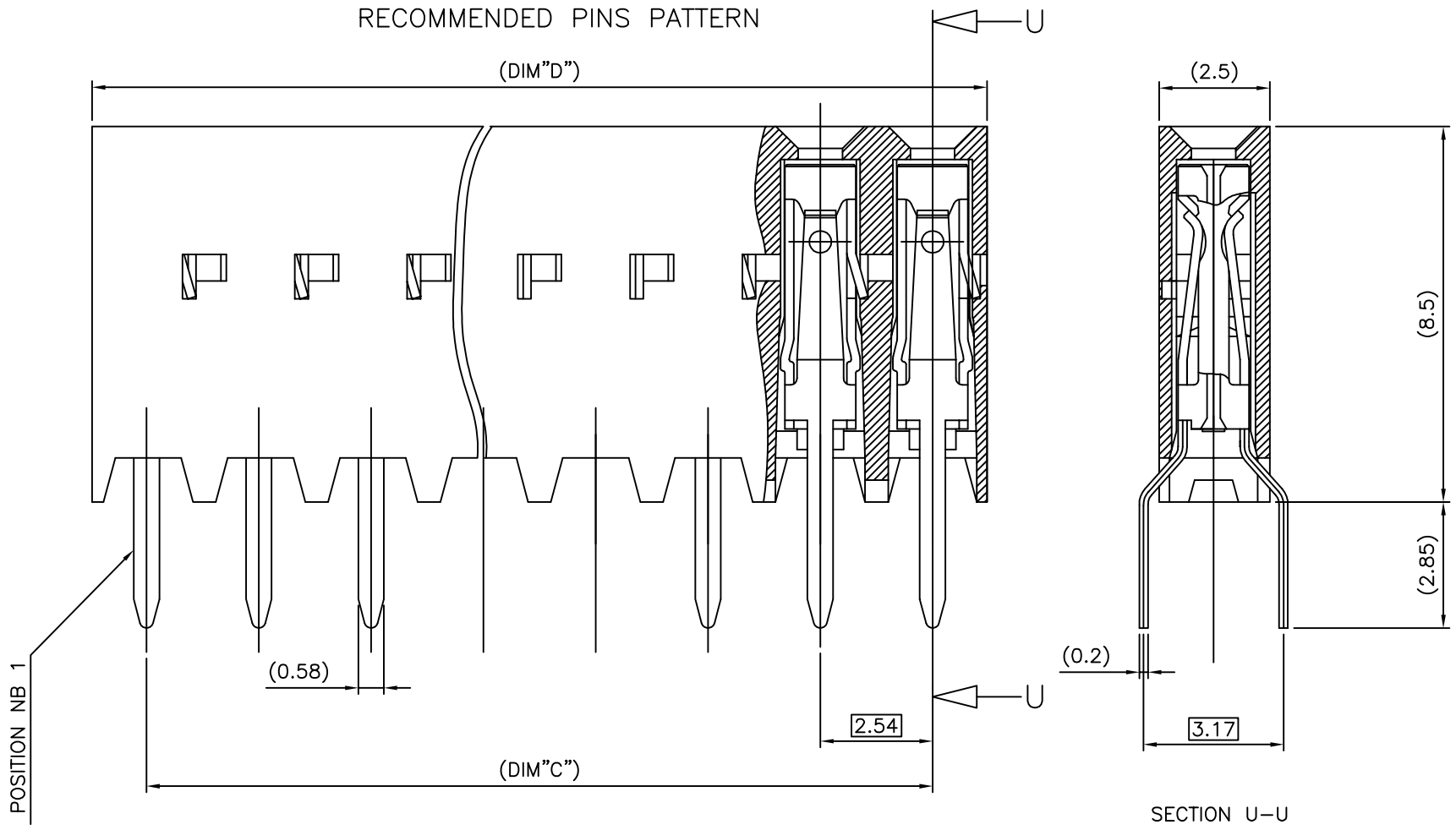

SECTION U–U

NOTES:

1 – MATERIAL HOUSING: THERMOPLASTIC POLYESTER, 30% GLASS FILLED, COLOUR BLUE, FLAME RETARDANT: PER UL–94 CATEGORY V0.
MATERIAL TERMINAL: PHOSPHORE BRONZE EXTRA HARD.

2 – CONNECTOR MEANT TO BE USED FOR PC BOARD WITH NON PLATED THROUGH HOLES.

3 – RoHS COMPATIBLE PRODUCT SPECIFICATIONS

a – PLATING:
– "LF" MEANS THE PRODUCT IS LEAD–FREE, 2µm MINIMUM MATTE TIN OVER 1.27µm MINIMUM NICKEL UNDERPLATE.

b – MANUFACTURING PROCESS COMPATIBILITY
– THE HOUSING WILL WITHSTAND EXPOSURE TO 260°C ±5°C SOLDER BATH TEMPERATURE FOR 5 SECONDS IN A WAVE SOLDER APPLICATION WITH A 1.6mm MIN THICK CIRCUIT BOARD.

c – LABELING:
– MEETS PACKAGING SPECS AS PER GS–14–920

d – LEGAL STATEMENT: SEE GS–47–0004

95200–4XXLF	5 µm Sn	Sn
95200–3XXLF	0.76 µm GOLD	Sn
PLATING CODE	CONTACT AREA	SOLDER TAIL
	PLATING THICKNESS OVER 1.27µm Ni	

mat'l. code SEE NOTES				surface ISO 1302	tolerance ISO 406 ISO 1101	projection	product family DX VCC SR
ltr	ecn no	dr	date	tolerances unless otherwise specified			title OFF SET LEGS SELECTED LOADED
H	F04–0347	DLE	04.11.15	angles	linear .0±.x	mm	
J	F06–0233	DLE	06.07.13		.00±.0x		
K	F07–0271	LMU	07.12.06	0°±x°	.000±.00x	scale 10:1	
L	B–19123	LMU	14.10.21	dr	D.LEGRAND	01.12.05	dwg no 95200 sheet 1 of 1 size A2
M	B–19232	LMU	14.10.28	engr	P.NIZZI	01.12.05	
				chr	D.LEGRAND	01.12.05	
G	F03–0284	DLE	03.10.15	appd	PNZ	01.12.05	type CUSTOMER Drawing
sheet index	revision sheet						

Copyright FCI
FCIconnect.com
form: A2
Printed: Nov 05, 2014
STATUS:Released
PDS: Rev :M