CUSTOMER TERMINAL	RoHS	LEAD(Pb)-FREE
Sn100%	Yes	No

compliant RoHS WE-MIDCOM

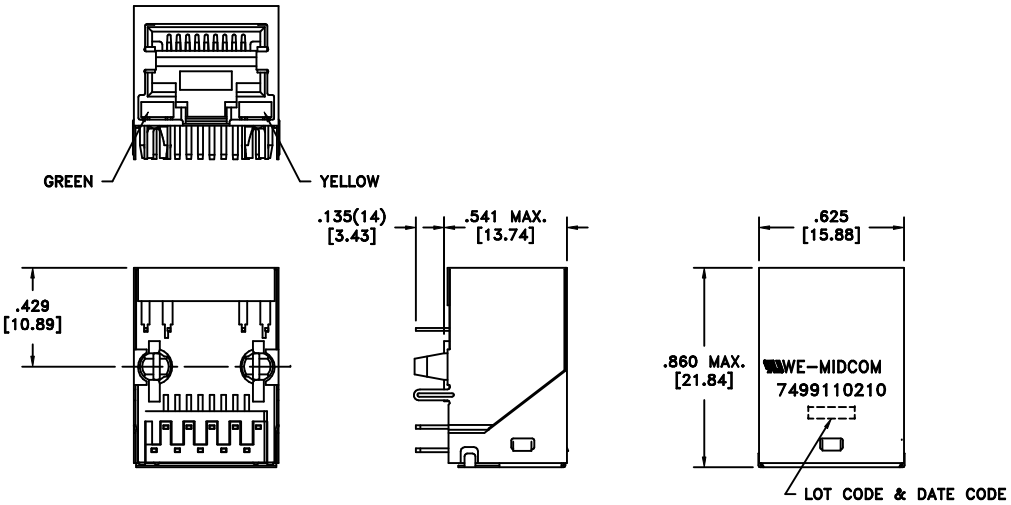

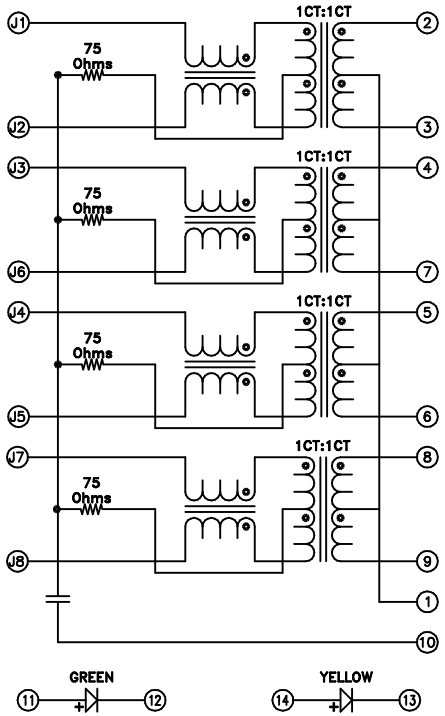

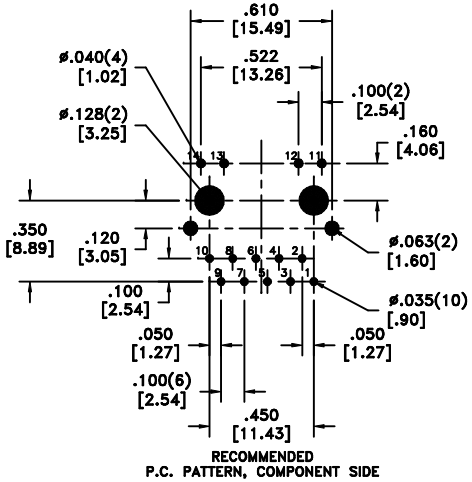

ELECTRICAL SPECIFICATIONS @ 25°C unless otherwise noted:

PARAMETER		TEST CONDITIONS	VALUE
INDUCTANCE	J1-J2	100kHz, 100mVAC, 8mADC, Lp	350uH min.
INDUCTANCE	J3-J6	100kHz, 100mVAC, 8mADC, Lp	350uH min.
INDUCTANCE	J4-J5	100kHz, 100mVAC, 8mADC, Lp	350uH min.
INDUCTANCE	J7-J8	100kHz, 100mVAC, 8mADC, Lp	350uH min.
DIELECTRIC	P1-J1	-	1500Vrms, 1 minute
TURNS RATIO		Per Schematic	-
INSERTION LOSS		1M - 100MHz	-1.0dB max.
RETURN LOSS		1M - 40MHz	-18dB min.
RETURN LOSS		40M - 60MHz	-14dB min.
RETURN LOSS		60M - 80MHz	-12dB min.
RETURN LOSS		80M - 100MHz	-10dB min.
CROSSTALK		1M - 100MHz	-27dB min.
COMMON MODE REJECTION		1M - 100MHz	-30dB min.

GENERAL SPECIFICATIONS:
OPERATING TEMPERATURE RANGE: 0°C to +70°C.

REV.	DATE
6B	8/08
6A	2/08

AGENCY NUMBER	
UL60950-1	E205930

Packaging Specifications
Method: Tube
PKG-0524
www.midcom-inc.com

Unless otherwise specified:
Tolerances: Fractions: ±1/64
Angles: ±1° Decimals: ±.010[.25]

This drawing is dual dimensioned. Dimensions in brackets are in millimeters.

DRAWING TITLE
TRANSFORMER
Gigabit
eiSos p/n: 7499110210

Midcom-WE
www.midcom-inc.com

REVISIONS: SEE SHEET 1

DRAWING NO.
7499110210

SCALE ---

SHEET 2 OF 6