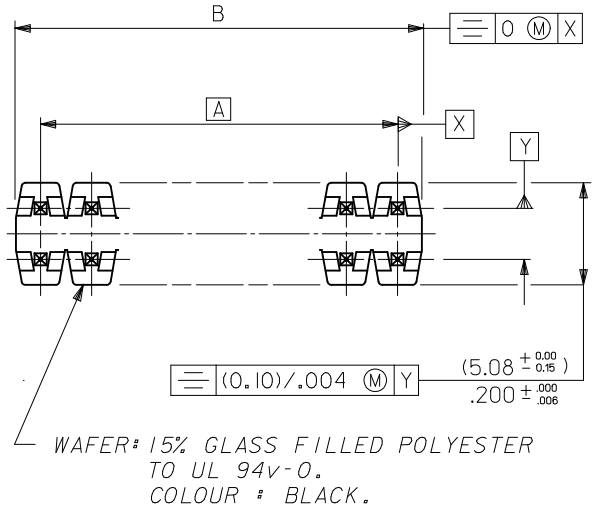

CKT SIZE	DIM. "A"	DIM. "B" (+0 -0.20) (+0 -.008)	CKT SIZE	DIM. "A"	DIM. "B" (+0 -0.20) (+0 -.008)
2X 1	———	(2.54) .100	2X21	(50.80) 2.000	(53.34) 2.100
2X 2	(2.54) .100	(5.08) .200	2X22	(53.34) 2.100	(55.88) 2.200
2X 3	(5.08) .200	(7.62) .300	2X23	(55.88) 2.200	(58.42) 2.300
2X 4	(7.62) .300	(10.16) .400	2X24	(58.42) 2.300	(60.96) 2.400
2X 5	(10.16) .400	(12.70) .500	2X25	(60.96) 2.400	(63.50) 2.500
2X 6	(12.70) .500	(15.24) .600	2X26	(63.50) 2.500	(66.04) 2.600
2X 7	(15.24) .600	(17.78) .700	2X27	(66.04) 2.600	(68.58) 2.700
2X 8	(17.78) .700	(20.32) .800	2X28	(68.58) 2.700	(71.12) 2.800
2X 9	(20.32) .800	(22.86) .900	2X29	(71.12) 2.800	(73.66) 2.900
2X10	(22.86) .900	(25.40) 1.000	2X30	(73.66) 2.900	(76.20) 3.000
2X11	(25.40) 1.000	(27.94) 1.100	2X31	(76.20) 3.000	(78.74) 3.100
2X12	(27.94) 1.100	(30.48) 1.200	2X32	(78.74) 3.100	(81.28) 3.200
2X13	(30.48) 1.200	(33.02) 1.300	2X33	(81.28) 3.200	(83.82) 3.300
2X14	(33.02) 1.300	(35.56) 1.400	2X34	(83.82) 3.300	(86.36) 3.400
2X15	(35.56) 1.400	(38.10) 1.500	2X35	(86.36) 3.400	(88.90) 3.500
2X16	(38.10) 1.500	(40.64) 1.600	2X36	(88.90) 3.500	(91.44) 3.600
2X17	(40.64) 1.600	(43.18) 1.700	2X37	(91.44) 3.600	(93.98) 3.700
2X18	(43.18) 1.700	(45.72) 1.800	2X38	(93.98) 3.700	(96.52) 3.800
2X19	(45.72) 1.800	(48.26) 1.900	2X39	(96.52) 3.800	(99.06) 3.900
2X20	(48.26) 1.900	(50.80) 2.000	2X40	(99.06) 3.900	(101.60) 4.000

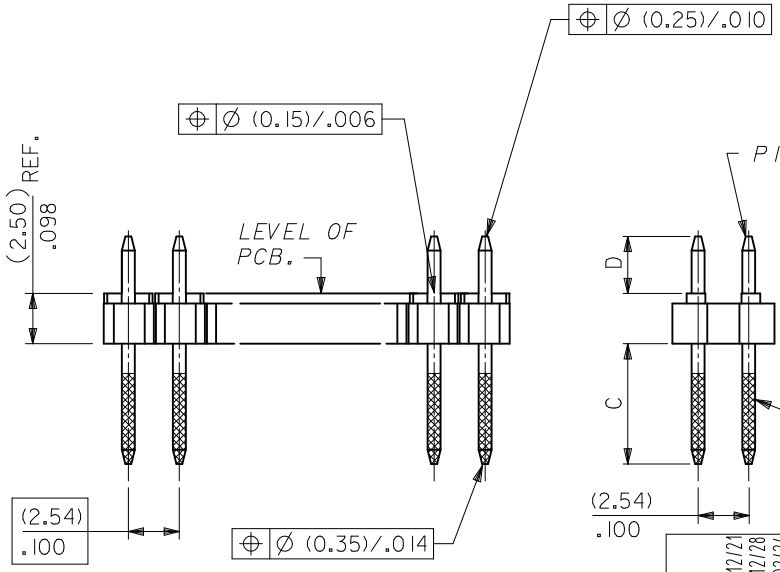

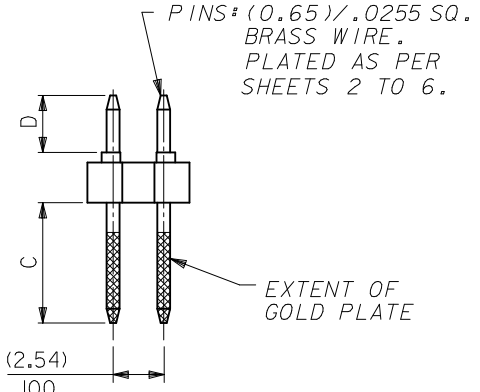

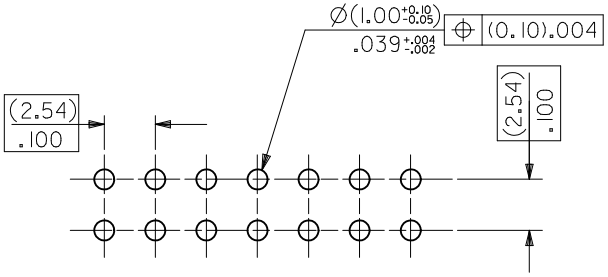

RECOMMENDED P.C. BOARD HOLE PATTERN

NOTES

1. PLEASE REFER TO SHT 2 FOR PLATING DETAILS.
2. PLEASE REFER TO SHT 3-8 FOR DIMENSIONS C & D.
3. RECOMMENDED PCB THICKNESS 1.60MM
4. PRODUCT SPECIFICATION: PS-99020-0001

CHANGE DOC. NO		DESCRIPTION
EC NO: S2012-0490	2011/12/21	
DRWN:ATSEE	2011/12/28	
CHKD:SKANG	2012/02/24	
APPR:MLONG		
0		REV

QUALITY SYMBOLS: F_A=0, F_C=0, F_P=0

GENERAL TOLERANCES (UNLESS SPECIFIED)

	mm	INCH
4 PLACES	± ---	± ---
3 PLACES	± ---	± ---
2 PLACES	± 0.20	± ---
1 PLACE	± ---	± ---
ANGULAR ± 3 °		

DRAFT WHERE APPLICABLE MUST REMAIN WITHIN DIMENSIONS

DIMENSION STYLE	SCALE	DESIGN UNITS	
MM ONLY	NTS	METRIC	THIRD ANGLE PROJECTION

DRAWN BY DB	DATE 1987/07/16	TITLE C GRID III DUAL ROW STRAIGHT PIN HEADER
CHECKED BY DB	DATE 1987/07/16	
APPROVED BY MLONG	DATE 2012/02/24	molex MOLEX INCORPORATED
MATERIAL NO. SEE TABLE		DOCUMENT NO. SD-90131-001 — SHEET NO. 1 OF 8
SIZE A3		THIS DRAWING CONTAINS INFORMATION THAT IS PROPRIETARY TO MOLEX INCORPORATED AND SHOULD NOT BE USED WITHOUT WRITTEN PERMISSION

PLATING OPTIONS	PLATING DESCRIPTION
A	3.00μm MIN TIN OVER 1.27MIN NICKEL OVERALL
B	0.38μm MIN GOLD IN SELECTED AREA AND 3.00μm MIN TIN IN SELECTED AREA AND 1.30μm MIN NICKEL OVERALL
C	0.76μm MIN GOLD IN SELECTED AREA AND 3.00μm MIN TIN IN SELECTED AREA AND 1.30μm MIN NICKEL OVERALL
D	0.05-0.10μm GOLD FLASH IN SELECTED AREA AND 3.00μm MIN TIN IN SELECTED AREA AND 1.30μm MIN NICKEL OVERALL
E	0.38μm MIN GOLD IN SELECTED AREA (2 SIDES) AND 3.00μm MIN TIN IN SELECTED AREA AND 1.30μm MIN NICKEL OVERALL
F	0.76μm MIN GOLD IN SELECTED AREA (2 SIDES) AND 3.00μm MIN TIN IN SELECTED AREA AND 1.30μm MIN NICKEL OVERALL
G	0.05-0.10μm GOLD FLASH IN SELECTED AREA (2 SIDES) AND 3.00μm MIN TIN IN SELECTED AREA AND 1.30μm MIN NICKEL OVERALL

CHANGE DOC. NO
EC NO: S2012-0490
DRWN:ATSEE 2011/12/21
CH'KD:SKANG 2011/12/28
APPR:MLONG 2012/02/24
DESCRIPTION
REV 0

QUALITY SYMBOLS
F_A=0
F_C=0
F_P=0

GENERAL TOLERANCES (UNLESS SPECIFIED)

	mm	INCH
4 PLACES	± ---	± ---
3 PLACES	± ---	± ---
2 PLACES	± 0.20	± ---
1 PLACE	± ---	± ---

ANGULAR ± 3 °

DRAFT WHERE APPLICABLE MUST REMAIN WITHIN DIMENSIONS

DIMENSION STYLE: MM ONLY
SCALE: NTS
DESIGN UNITS: METRIC
THIRD ANGLE PROJECTION

DRAWN BY: DB DATE: 1987/07/16
CHECKED BY: DB DATE: 1987/07/16
APPROVED BY: MLONG DATE: 2012/02/24

TITLE: C GRID III DUAL ROW STRAIGHT PIN HEADER

MOLEX INCORPORATED

MATERIAL NO.: SEE TABLE
DOCUMENT NO.: SD-90131-001
SHEET NO.: 2 OF 8
SIZE: A3

THIS DRAWING CONTAINS INFORMATION THAT IS PROPRIETARY TO MOLEX INCORPORATED AND SHOULD NOT BE USED WITHOUT WRITTEN PERMISSION

	CIRCUIT SIZE	PLATING TYPE A PART NO.	PLATING TYPE E PART NO.	PLATING TYPE F PART NO.
	2 X 1	90131-0121	90131-0761	90131-0921
	2 X 2	-0122	-0762	-0922
	2 X 3	-0123	-0763	-0923
	2 X 4	-0124	-0764	-0924
	2 X 5	-0125	-0765	-0925
	2 X 6	-0126	-0766	-0926
	2 X 7	-0127	-0767	-0927
	2 X 8	-0128	-0768	-0928
	2 X 9	-0129	-0769	-0929
	2 X 10	-0130	-0770	-0930
	2 X 11	-0131	-0771	-0931
DIM C (±0.20) ±.008 (6.75) .266	2 X 12	-0132	-0772	-0932
	2 X 13	-0133	-0773	-0933
	2 X 14	-0134	-0774	-0934
	2 X 15	-0135	-0775	-0935
	2 X 16	-0136	-0776	-0936
	2 X 17	-0137	-0777	-0937
	2 X 18	-0138	-0778	-0938
	2 X 19	-0139	-0779	-0939
	2 X 20	-0140	-0780	-0940
	2 X 21	-0141	-0781	-0941
DIM D (+0.20 −0.30) +.008 −.012 (2.90) .114	2 X 22	-0142	-0782	-0942
	2 X 23	-0143	-0783	-0943
	2 X 24	-0144	-0784	-0944
	2 X 25	-0145	-0785	-0945
	2 X 26	-0146	-0786	-0946
	2 X 27	-0147	-0787	-0947
	2 X 28	-0148	-0788	-0948
	2 X 29	-0149	-0789	-0949
	2 X 30	-0150	-0790	-0950
	2 X 31	-0151	-0791	-0951
	2 X 32	-0152	-0792	-0952
	2 X 33	-0153	-0793	-0953
	2 X 34	-0154	-0794	-0954
	2 X 35	-0155	-0795	-0955
	2 X 36	-0156	-0796	-0956
	2 X 37	-0157	-0797	-0957
	2 X 38	-0158	-0798	-0958
	2 X 39	-0159	-0799	-0959
	2 X 40	90131-0160	90131-0800	90131-0960

STANDARD PRODUCTS

CHANGE DOC. NO
EC NO: S2012-0490
DRWN:ATSEE 2011/12/21
CH'KD:SKANG 2011/12/28
APPR:MLONG 2012/02/24
DESCRIPTION
REV 0

QUALITY SYMBOLS
F_A=0
F_C=0
F_P=0

GENERAL TOLERANCES (UNLESS SPECIFIED)

	mm	INCH
4 PLACES	± ---	± ---
3 PLACES	± ---	± ---
2 PLACES	± 0.20	± ---
1 PLACE	± ---	± ---
ANGULAR ± 3 °		

DRAFT WHERE APPLICABLE MUST REMAIN WITHIN DIMENSIONS

DIMENSION STYLE: MM ONLY
SCALE: NTS
DESIGN UNITS: METRIC
THIRD ANGLE PROJECTION

DRAWN BY: DB DATE: 1987/07/16
CHECKED BY: DB DATE: 1987/07/16
APPROVED BY: MLONG DATE: 2012/02/24

TITLE: C GRID III DUAL ROW STRAIGHT PIN HEADER

molex MOLEX INCORPORATED

MATERIAL NO.: SEE TABLE
DOCUMENT NO.: SD-90131-001
SHEET NO.: 3 OF 8
SIZE: A3

THIS DRAWING CONTAINS INFORMATION THAT IS PROPRIETARY TO MOLEX INCORPORATED AND SHOULD NOT BE USED WITHOUT WRITTEN PERMISSION

CIRCUIT SIZE	PLATING TYPE A PART NO.	PLATING TYPE E PART NO.	PLATING TYPE F PART NO.
2 X 1	90131-0041	90131-0681	90131-0841
2 X 2	-0042	-0682	-0842
2 X 3	-0043	-0683	-0843
2 X 4	-0044	-0684	-0844
2 X 5	-0045	-0685	-0845
2 X 6	-0046	-0686	-0846
2 X 7	-0047	-0687	-0847
2 X 8	-0048	-0688	-0848
2 X 9	-0049	-0689	-0849
2 X 10	-0050	-0690	-0850
2 X 11	-0051	-0691	-0851
2 X 12	-0052	-0692	-0852
2 X 13	-0053	-0693	-0853
2 X 14	-0054	-0694	-0854
2 X 15	-0055	-0695	-0855
2 X 16	-0056	-0696	-0856
2 X 17	-0057	-0697	-0857
2 X 18	-0058	-0698	-0858
2 X 19	-0059	-0699	-0859
2 X 20	-0060	-0700	-0860
2 X 21	-0061	-0701	-0861
2 X 22	-0062	-0702	-0862
2 X 23	-0063	-0703	-0863
2 X 24	-0064	-0704	-0864
2 X 25	-0065	-0705	-0865
2 X 26	-0066	-0706	-0866
2 X 27	-0067	-0707	-0867
2 X 28	-0068	-0708	-0868
2 X 29	-0069	-0709	-0869
2 X 30	-0070	-0710	-0870
2 X 31	-0071	-0711	-0871
2 X 32	-0072	-0712	-0872
2 X 33	-0073	-0713	-0873
2 X 34	-0074	-0714	-0874
2 X 35	-0075	-0715	-0875
2 X 36	-0076	-0716	-0876
2 X 37	-0077	-0717	-0877
2 X 38	-0078	-0718	-0878
2 X 39	-0079	-0719	-0879
2 X 40	90131-0080	90131-0720	90131-0880

DIM C (± 0.20) $\pm .008$ (5.75) .226

DIM D $(\pm 0.20 / -0.30)$ $+.008 / -.012$ (2.90) .114

CIRCUIT SIZE	PLATING TYPE A PART NO.	PLATING TYPE E PART NO.	PLATING TYPE F PART NO.
2 X 1	90131-0081	90131-0721	90131-0881
2 X 2	-0082	-0722	-0882
2 X 3	-0083	-0723	-0883
2 X 4	-0084	-0724	-0884
2 X 5	-0085	-0725	-0885
2 X 6	-0086	-0726	-0886
2 X 7	-0087	-0727	-0887
2 X 8	-0088	-0728	-0888
2 X 9	-0089	-0729	-0889
2 X 10	-0090	-0730	-0890
2 X 11	-0091	-0731	-0891
2 X 12	-0092	-0732	-0892
2 X 13	-0093	-0733	-0893
2 X 14	-0094	-0734	-0894
2 X 15	-0095	-0735	-0895
2 X 16	-0096	-0736	-0896
2 X 17	-0097	-0737	-0897
2 X 18	-0098	-0738	-0898
2 X 19	-0099	-0739	-0899
2 X 20	-0100	-0740	-0900
2 X 21	-0101	-0741	-0901
2 X 22	-0102	-0742	-0902
2 X 23	-0103	-0743	-0903
2 X 24	-0104	-0744	-0904
2 X 25	-0105	-0745	-0905
2 X 26	-0106	-0746	-0906
2 X 27	-0107	-0747	-0907
2 X 28	-0108	-0748	-0908
2 X 29	-0109	-0749	-0909
2 X 30	-0110	-0750	-0910
2 X 31	-0111	-0751	-0911
2 X 32	-0112	-0752	-0912
2 X 33	-0113	-0753	-0913
2 X 34	-0114	-0754	-0914
2 X 35	-0115	-0755	-0915
2 X 36	-0116	-0756	-0916
2 X 37	-0117	-0757	-0917
2 X 38	-0118	-0758	-0918
2 X 39	-0119	-0759	-0919
2 X 40	90131-0120	90131-0760	90131-0920

DIM C (± 0.20) $\pm .008$ (5.75) .226

DIM D (± 0.25) $\pm .010$ (4.50) .177

NON-STANDARD PRODUCTS

CHANGE DOC. NO
EC NO: S2012-0490
DRWN:ATSEE 2011/12/21
CH'KD:SKANG 2011/12/28
APPR:MLONG 2012/02/24
DESCRIPTION
REV 0

QUALITY SYMBOLS
F_A=0
F_C=0
F_P=0

GENERAL TOLERANCES (UNLESS SPECIFIED)

	mm	INCH
4 PLACES	± ---	± ---
3 PLACES	± ---	± ---
2 PLACES	± 0.20	± ---
1 PLACE	± ---	± ---

ANGULAR ± 3 °

DRAFT WHERE APPLICABLE MUST REMAIN WITHIN DIMENSIONS

DIMENSION STYLE: MM ONLY
SCALE: NTS
DESIGN UNITS: METRIC
THIRD ANGLE PROJECTION

DRAWN BY: DB DATE: 1987/07/16
CHECKED BY: DB DATE: 1987/07/16
APPROVED BY: MLONG DATE: 2012/02/24

TITLE: C GRID III DUAL ROW STRAIGHT PIN HEADER

molex MOLEX INCORPORATED

MATERIAL NO.: SEE TABLE
DOCUMENT NO.: SD-90131-001
SHEET NO.: 4 OF 8
SIZE: A3

THIS DRAWING CONTAINS INFORMATION THAT IS PROPRIETARY TO MOLEX INCORPORATED AND SHOULD NOT BE USED WITHOUT WRITTEN PERMISSION

CIRCUIT SIZE	PLATING TYPE A PART NO.	PLATING TYPE E PART NO.	PLATING TYPE F PART NO.
2 X 1	90131-0161	90131-0801	90131-0961
2 X 2	-0162	-0802	-0962
2 X 3	-0163	-0803	-0963
2 X 4	-0164	-0804	-0964
2 X 5	-0165	-0805	-0965
2 X 6	-0166	-0806	-0966
2 X 7	-0167	-0807	-0967
2 X 8	-0168	-0808	-0968
2 X 9	-0169	-0809	-0969
2 X 10	-0170	-0810	-0970
2 X 11	-0171	-0811	-0971
2 X 12	-0172	-0812	-0972
2 X 13	-0173	-0813	-0973
2 X 14	-0174	-0814	-0974
2 X 15	-0175	-0815	-0975
2 X 16	-0176	-0816	-0976
2 X 17	-0177	-0817	-0977
2 X 18	-0178	-0818	-0978
2 X 19	-0179	-0819	-0979
2 X 20	-0180	-0820	-0980
2 X 21	-0181	-0821	-0981
2 X 22	-0182	-0822	-0982
2 X 23	-0183	-0823	-0983
2 X 24	-0184	-0824	-0984
2 X 25	-0185	-0825	-0985
2 X 26	-0186	-0826	-0986
2 X 27	-0187	-0827	-0987
2 X 28	-0188	-0828	-0988
2 X 29	-0189	-0829	-0989
2 X 30	-0190	-0830	-0990
2 X 31	-0191	-0831	-0991
2 X 32	-0192	-0832	-0992
2 X 33	-0193	-0833	-0993
2 X 34	-0194	-0834	-0994
2 X 35	-0195	-0835	-0995
2 X 36	-0196	-0836	-0996
2 X 37	-0197	-0837	-0997
2 X 38	-0198	-0838	-0998
2 X 39	-0199	-0839	-0999
2 X 40	90131-0200	90131-0840	90131-1000

DIM C $^{(\pm 0.20)}_{\pm .008}$ (6.75) .266

DIM D $^{(\pm 0.25)}_{\pm .010}$ (4.50) .177

NON-STANDARD PRODUCTS

CHANGE DOC. NO
EC NO: S2012-0490
DRWN:ATSEE 2011/12/21
CHKD:SKANG 2011/12/28
APPR:MLONG 2012/02/24
DESCRIPTION
REV 0

QUALITY SYMBOLS
F_A=0
F_C=0
F_P=0

GENERAL TOLERANCES (UNLESS SPECIFIED)

	mm	INCH
4 PLACES	± ---	± ---
3 PLACES	± ---	± ---
2 PLACES	± 0.20	± ---
1 PLACE	± ---	± ---
ANGULAR ± 3 °		

DRAFT WHERE APPLICABLE MUST REMAIN WITHIN DIMENSIONS

DIMENSION STYLE: MM ONLY
SCALE: NTS
DESIGN UNITS: METRIC
THIRD ANGLE PROJECTION

DRAWN BY: DB DATE: 1987/07/16
CHECKED BY: DB DATE: 1987/07/16
APPROVED BY: MLONG DATE: 2012/02/24

TITLE: C GRID III DUAL ROW STRAIGHT PIN HEADER

MOLEX INCORPORATED

MATERIAL NO.: SEE TABLE
DOCUMENT NO.: SD-90131-001
SHEET NO.: 5 OF 8
SIZE: A3

THIS DRAWING CONTAINS INFORMATION THAT IS PROPRIETARY TO MOLEX INCORPORATED AND SHOULD NOT BE USED WITHOUT WRITTEN PERMISSION

CIRCUIT SIZE	PLATING TYPE B PART NO.	PLATING TYPE C PART NO.	PLATING TYPE D PART NO.	PLATING TYPE G PART NO.
2 X 1	90131-0281	90131-0441	90131-0601	90131-1081
2 X 2	-0282	-0442	-0602	-1082
2 X 3	-0283	-0443	-0603	-1083
2 X 4	-0284	-0444	-0604	-1084
2 X 5	-0285	-0445	-0605	-1085
2 X 6	-0286	-0446	-0606	-1086
2 X 7	-0287	-0447	-0607	-1087
2 X 8	-0288	-0448	-0608	-1088
2 X 9	-0289	-0449	-0609	-1089
2 X 10	-0290	-0450	-0610	-1090
2 X 11	-0291	-0451	-0611	-1091
2 X 12	-0292	-0452	-0612	-1092
2 X 13	-0293	-0453	-0613	-1093
2 X 14	-0294	-0454	-0614	-1094
2 X 15	-0295	-0455	-0615	-1095
2 X 16	-0296	-0456	-0616	-1096
2 X 17	-0297	-0457	-0617	-1097
2 X 18	-0298	-0458	-0618	-1098
2 X 19	-0299	-0459	-0619	-1099
2 X 20	-0300	-0460	-0620	-1100
2 X 21	-0301	-0461	-0621	-1101
2 X 22	-0302	-0462	-0622	-1102
2 X 23	-0303	-0463	-0623	-1103
2 X 24	-0304	-0464	-0624	-1104
2 X 25	-0305	-0465	-0625	-1105
2 X 26	-0306	-0466	-0626	-1106
2 X 27	-0307	-0467	-0627	-1107
2 X 28	-0308	-0468	-0628	-1108
2 X 29	-0309	-0469	-0629	-1109
2 X 30	-0310	-0470	-0630	-1110
2 X 31	-0311	-0471	-0631	-1111
2 X 32	-0312	-0472	-0632	-1112
2 X 33	-0313	-0473	-0633	-1113
2 X 34	-0314	-0474	-0634	-1114
2 X 35	-0315	-0475	-0635	-1115
2 X 36	-0316	-0476	-0636	-1116
2 X 37	-0317	-0477	-0637	-1117
2 X 38	-0318	-0478	-0638	-1118
2 X 39	-0319	-0479	-0639	-1119
2 X 40	90131-0320	90131-0480	90131-0640	90131-1120

DIM C (± 0.20) $\pm .008$ (6.75) .266

DIM D $(^{+0.20}_{-0.30})$ $^{+.008}_{-.012}$ (2.90) .114

CIRCUIT SIZE	PLATING TYPE B PART NO.	PLATING TYPE C PART NO.	PLATING TYPE D PART NO.	PLATING TYPE G PART NO.
2 X 1	90131-0201	90131-0361	90131-0521	90131-1001
2 X 2	-0202	-0362	-0522	-1002
2 X 3	-0203	-0363	-0523	-1003
2 X 4	-0204	-0364	-0524	-1004
2 X 5	-0205	-0365	-0525	-1005
2 X 6	-0206	-0366	-0526	-1006
2 X 7	-0207	-0367	-0527	-1007
2 X 8	-0208	-0368	-0528	-1008
2 X 9	-0209	-0369	-0529	-1009
2 X 10	-0210	-0370	-0530	-1010
2 X 11	-0211	-0371	-0531	-1011
2 X 12	-0212	-0372	-0532	-1012
2 X 13	-0213	-0373	-0533	-1013
2 X 14	-0214	-0374	-0534	-1014
2 X 15	-0215	-0375	-0535	-1015
2 X 16	-0216	-0376	-0536	-1016
2 X 17	-0217	-0377	-0537	-1017
2 X 18	-0218	-0378	-0538	-1018
2 X 19	-0219	-0379	-0539	-1019
2 X 20	-0220	-0380	-0540	-1020
2 X 21	-0221	-0381	-0541	-1021
2 X 22	-0222	-0382	-0542	-1022
2 X 23	-0223	-0383	-0543	-1023
2 X 24	-0224	-0384	-0544	-1024
2 X 25	-0225	-0385	-0545	-1025
2 X 26	-0226	-0386	-0546	-1026
2 X 27	-0227	-0387	-0547	-1027
2 X 28	-0228	-0388	-0548	-1028
2 X 29	-0229	-0389	-0549	-1029
2 X 30	-0230	-0390	-0550	-1030
2 X 31	-0231	-0391	-0551	-1031
2 X 32	-0232	-0392	-0552	-1032
2 X 33	-0233	-0393	-0553	-1033
2 X 34	-0234	-0394	-0554	-1034
2 X 35	-0235	-0395	-0555	-1035
2 X 36	-0236	-0396	-0556	-1036
2 X 37	-0237	-0397	-0557	-1037
2 X 38	-0238	-0398	-0558	-1038
2 X 39	-0239	-0399	-0559	-1039
2 X 40	90131-0240	90131-0400	90131-0560	90131-1040

DIM C (± 0.20) $\pm .008$ (5.75) .226

DIM D $(^{+0.20}_{-0.30})$ $^{+.008}_{-.012}$ (2.90) .114

NON-STANDARD PRODUCTS
NOT FOR GENERAL RELEASE

CHANGE DOC. NO
EC NO: S2012-0490
DRWN:ATSEE 2011/12/21
CH'KD:SKANG 2011/12/28
APPR:MLONG 2012/02/24
DESCRIPTION
REV 0

QUALITY SYMBOLS
F_A=0
F_C=0
F_P=0

GENERAL TOLERANCES (UNLESS SPECIFIED)

	mm	INCH
4 PLACES	± ---	± ---
3 PLACES	± ---	± ---
2 PLACES	± 0.20	± ---
1 PLACE	± ---	± ---
ANGULAR ± 3 °		

DRAFT WHERE APPLICABLE MUST REMAIN WITHIN DIMENSIONS

DIMENSION STYLE: MM ONLY
SCALE: NTS
DESIGN UNITS: METRIC
THIRD ANGLE PROJECTION

DRAWN BY: DB DATE: 1987/07/16
CHECKED BY: DB DATE: 1987/07/16
APPROVED BY: MLONG DATE: 2012/02/24

TITLE: C GRID III DUAL ROW STRAIGHT PIN HEADER

MOLEX INCORPORATED

MATERIAL NO.: SEE TABLE
DOCUMENT NO.: SD-90131-001
SHEET NO.: 6 OF 8
SIZE: A3

THIS DRAWING CONTAINS INFORMATION THAT IS PROPRIETARY TO MOLEX INCORPORATED AND SHOULD NOT BE USED WITHOUT WRITTEN PERMISSION

	CIRCUIT SIZE	PLATING TYPE B PART NO.	PLATING TYPE C PART NO.	PLATING TYPE D PART NO.	PLATING TYPE G PART NO.
	2 X 1	90131-0241	90131-0401	90131-0561	90131-1041
	2 X 2	-0242	-0402	-0562	-1042
	2 X 3	-0243	-0403	-0563	-1043
	2 X 4	-0244	-0404	-0564	-1044
	2 X 5	-0245	-0405	-0565	-1045
	2 X 6	-0246	-0406	-0566	-1046
	2 X 7	-0247	-0407	-0567	-1047
	2 X 8	-0248	-0408	-0568	-1048
	2 X 9	-0249	-0409	-0569	-1049
	2 X 10	-0250	-0410	-0570	-1050
	2 X 11	-0251	-0411	-0571	-1051
DIM C (±0.20) ±.008 (5.75) .226	2 X 12	-0252	-0412	-0572	-1052
	2 X 13	-0253	-0413	-0573	-1053
	2 X 14	-0254	-0414	-0574	-1054
	2 X 15	-0255	-0415	-0575	-1055
	2 X 16	-0256	-0416	-0576	-1056
	2 X 17	-0257	-0417	-0577	-1057
	2 X 18	-0258	-0418	-0578	-1058
	2 X 19	-0259	-0419	-0579	-1059
	2 X 20	-0260	-0420	-0580	-1060
	2 X 21	-0261	-0421	-0581	-1061
DIM D (±0.25) ±.010 (4.50) .177	2 X 22	-0262	-0422	-0582	-1062
	2 X 23	-0263	-0423	-0583	-1063
	2 X 24	-0264	-0424	-0584	-1064
	2 X 25	-0265	-0425	-0585	-1065
	2 X 26	-0266	-0426	-0586	-1066
	2 X 27	-0267	-0427	-0587	-1067
	2 X 28	-0268	-0428	-0588	-1068
	2 X 29	-0269	-0429	-0589	-1069
	2 X 30	-0270	-0430	-0590	-1070
	2 X 31	-0271	-0431	-0591	-1071
	2 X 32	-0272	-0432	-0592	-1072
	2 X 33	-0273	-0433	-0593	-1073
	2 X 34	-0274	-0434	-0594	-1074
	2 X 35	-0275	-0435	-0595	-1075
	2 X 36	-0276	-0436	-0596	-1076
	2 X 37	-0277	-0437	-0597	-1077
	2 X 38	-0278	-0438	-0598	-1078
	2 X 39	-0279	-0439	-0599	-1079
	2 X 40	90131-0280	90131-0440	90131-0600	90131-1080

	CIRCUIT SIZE	PLATING TYPE B PART NO.	PLATING TYPE C PART NO.	PLATING TYPE D PART NO.	PLATING TYPE G PART NO.
	2 X 1	90131-0321	90131-0481	90131-0641	90131-1121
	2 X 2	-0322	-0482	-0642	-1122
	2 X 3	-0323	-0483	-0643	-1123
	2 X 4	-0324	-0484	-0644	-1124
	2 X 5	-0325	-0485	-0645	-1125
	2 X 6	-0326	-0486	-0646	-1126
	2 X 7	-0327	-0487	-0647	-1127
	2 X 8	-0328	-0488	-0648	-1128
	2 X 9	-0329	-0489	-0649	-1129
	2 X 10	-0330	-0490	-0650	-1130
	2 X 11	-0331	-0491	-0651	-1131
DIM C (±0.20) ±.008 (6.75) .266	2 X 12	-0332	-0492	-0652	-1132
	2 X 13	-0333	-0493	-0653	-1133
	2 X 14	-0334	-0494	-0654	-1134
	2 X 15	-0335	-0495	-0655	-1135
	2 X 16	-0336	-0496	-0656	-1136
	2 X 17	-0337	-0497	-0657	-1137
	2 X 18	-0338	-0498	-0658	-1138
	2 X 19	-0339	-0499	-0659	-1139
	2 X 20	-0340	-0500	-0660	-1140
	2 X 21	-0341	-0501	-0661	-1141
DIM D (±0.25) ±.010 (4.50) .177	2 X 22	-0342	-0502	-0662	-1142
	2 X 23	-0343	-0503	-0663	-1143
	2 X 24	-0344	-0504	-0664	-1144
	2 X 25	-0345	-0505	-0665	-1145
	2 X 26	-0346	-0506	-0666	-1146
	2 X 27	-0347	-0507	-0667	-1147
	2 X 28	-0348	-0508	-0668	-1148
	2 X 29	-0349	-0509	-0669	-1149
	2 X 30	-0350	-0510	-0670	-1150
	2 X 31	-0351	-0511	-0671	-1151
	2 X 32	-0352	-0512	-0672	-1152
	2 X 33	-0353	-0513	-0673	-1153
	2 X 34	-0354	-0514	-0674	-1154
	2 X 35	-0355	-0515	-0675	-1155
	2 X 36	-0356	-0516	-0676	-1156
	2 X 37	-0357	-0517	-0677	-1157
	2 X 38	-0358	-0518	-0678	-1158
	2 X 39	-0359	-0519	-0679	-1159
	2 X 40	90131-0360	90131-0520	90131-0680	90131-1160

NON-STANDARD PRODUCTS
NOT FOR GENERAL RELEASE

CHANGE DOC. NO
EC NO: S2012-0490
DRWN:ATSEE 2011/12/21
CH'KD:SKANG 2011/12/28
APPR:MLONG 2012/02/24
DESCRIPTION
REV 0

QUALITY SYMBOLS
FA=0
FC=0
FP=0

GENERAL TOLERANCES (UNLESS SPECIFIED)

	mm	INCH
4 PLACES	± ---	± ---
3 PLACES	± ---	± ---
2 PLACES	± 0.20	± ---
1 PLACE	± ---	± ---
ANGULAR ± 3 °		

DRAFT WHERE APPLICABLE MUST REMAIN WITHIN DIMENSIONS

DIMENSION STYLE: MM ONLY
SCALE: NTS
DESIGN UNITS: METRIC
THIRD ANGLE PROJECTION

DRAWN BY: DB DATE: 1987/07/16
CHECKED BY: DB DATE: 1987/07/16
APPROVED BY: MLONG DATE: 2012/02/24

TITLE: C GRID III DUAL ROW STRAIGHT PIN HEADER

molex MOLEX INCORPORATED

MATERIAL NO.: SEE TABLE
DOCUMENT NO.: SD-90131-001
SHEET NO.: 7 OF 8
SIZE: A3

THIS DRAWING CONTAINS INFORMATION THAT IS PROPRIETARY TO MOLEX INCORPORATED AND SHOULD NOT BE USED WITHOUT WRITTEN PERMISSION

CIRCUIT SIZE	PLATING TYPE A PART NO.	PIN PART NUMBER	WAFER PART NUMBER	DIM C (±0.20) ±.008	DIM D (+0.20 -0.30) +.008 -.012
2 X 6	90131-3126	90129-2008	90131-0040	(14.60) .575	(2.38) .094
2 X 36	90131-3128	90129-2008	90131-0040	(14.60) .575	(2.38) .094
2 X 40	90131-3127	90129-2008	90131-0040	(14.60) .575	(2.38) .094

STANDARD PRODUCTS

CHANGE DOC. NO
EC NO: S2012-0490
DRWN:ATSEE 2011/12/21
CH'KD:SKANG 2011/12/28
APPR:MLONG 2012/02/24
DESCRIPTION
REV 0

QUALITY SYMBOLS
F_A=0
F_C=0
F_P=0

GENERAL TOLERANCES (UNLESS SPECIFIED)

	mm	INCH
4 PLACES	± ---	± ---
3 PLACES	± ---	± ---
2 PLACES	± 0.20	± ---
1 PLACE	± ---	± ---
ANGULAR ± 3 °		

DRAFT WHERE APPLICABLE MUST REMAIN WITHIN DIMENSIONS

DIMENSION STYLE: MM ONLY
SCALE: NTS
DESIGN UNITS: METRIC
THIRD ANGLE PROJECTION

DRAWN BY: DB DATE: 1987/07/16
CHECKED BY: DB DATE: 1987/07/16
APPROVED BY: MLONG DATE: 2012/02/24

TITLE: C GRID III DUAL ROW STRAIGHT PIN HEADER

MOLEX INCORPORATED

MATERIAL NO.: SEE TABLE
DOCUMENT NO.: SD-90131-001
SHEET NO.: 8 OF 8
SIZE: A3

THIS DRAWING CONTAINS INFORMATION THAT IS PROPRIETARY TO MOLEX INCORPORATED AND SHOULD NOT BE USED WITHOUT WRITTEN PERMISSION

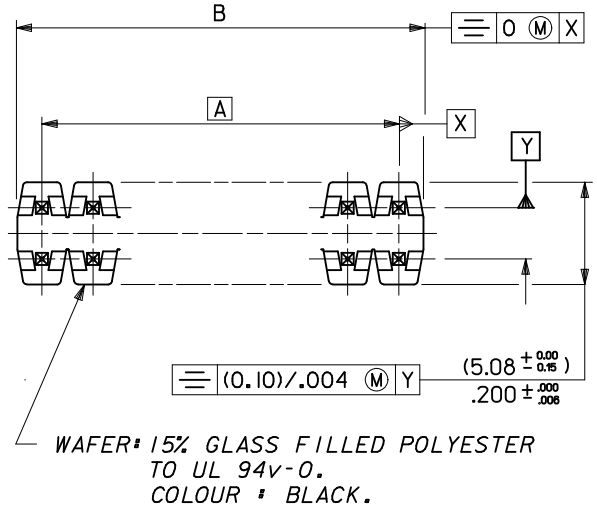

CKT SIZE	DIM. "A"		DIM. "B" (+0 -0.20) ± 0 -.008		CKT SIZE	DIM. "A"		DIM. "B" (+0 -0.20) ± 0 -.008	
2X 1	———		(2.54)	.100	2X21	(50.80)	2.000	(53.34)	2.100
2X 2	(2.54)	.100	(5.08)	.200	2X22	(53.34)	2.100	(55.88)	2.200
2X 3	(5.08)	.200	(7.62)	.300	2X23	(55.88)	2.200	(58.42)	2.300
2X 4	(7.62)	.300	(10.16)	.400	2X24	(58.42)	2.300	(60.96)	2.400
2X 5	(10.16)	.400	(12.70)	.500	2X25	(60.96)	2.400	(63.50)	2.500
2X 6	(12.70)	.500	(15.24)	.600	2X26	(63.50)	2.500	(66.04)	2.600
2X 7	(15.24)	.600	(17.78)	.700	2X27	(66.04)	2.600	(68.58)	2.700
2X 8	(17.78)	.700	(20.32)	.800	2X28	(68.58)	2.700	(71.12)	2.800
2X 9	(20.32)	.800	(22.86)	.900	2X29	(71.12)	2.800	(73.66)	2.900
2X10	(22.86)	.900	(25.40)	1.000	2X30	(73.66)	2.900	(76.20)	3.000
2X11	(25.40)	1.000	(27.94)	1.100	2X31	(76.20)	3.000	(78.74)	3.100
2X12	(27.94)	1.100	(30.48)	1.200	2X32	(78.74)	3.100	(81.28)	3.200
2X13	(30.48)	1.200	(33.02)	1.300	2X33	(81.28)	3.200	(83.82)	3.300
2X14	(33.02)	1.300	(35.56)	1.400	2X34	(83.82)	3.300	(86.36)	3.400
2X15	(35.56)	1.400	(38.10)	1.500	2X35	(86.36)	3.400	(88.90)	3.500
2X16	(38.10)	1.500	(40.64)	1.600	2X36	(88.90)	3.500	(91.44)	3.600
2X17	(40.64)	1.600	(43.18)	1.700	2X37	(91.44)	3.600	(93.98)	3.700
2X18	(43.18)	1.700	(45.72)	1.800	2X38	(93.98)	3.700	(96.52)	3.800
2X19	(45.72)	1.800	(48.26)	1.900	2X39	(96.52)	3.800	(99.06)	3.900
2X20	(48.26)	1.900	(50.80)	2.000	2X40	(99.06)	3.900	(101.60)	4.000

NOTES

1. FOR ASSY NUMBERS WITH FINISH OPTIONS AND DIM'S C & D SEE SHEETS 2 TO 7.

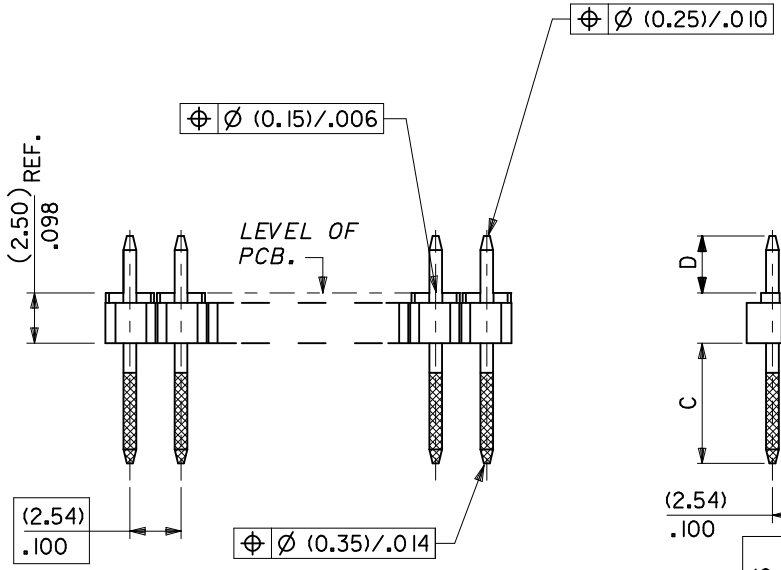

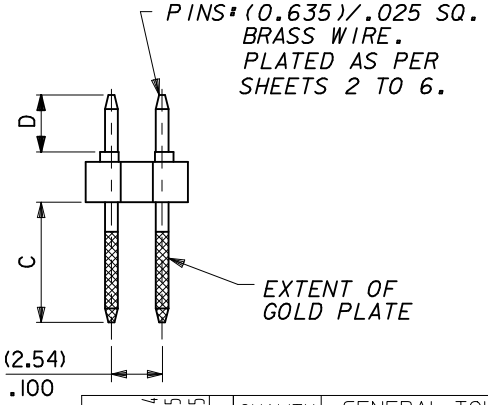

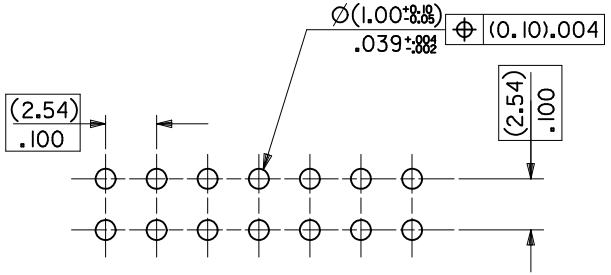

RECOMMENDED P.C. BOARD HOLE PATTERN

7	C
6	H
5	H
4	H
3	H
2	H
1	M

NOTES

2. RECOMMENDED PCB THICKNESS 1.6MM
3. PRODUCT SPECIFICATION: PS-99020-0001

ADDED NOTES
EC NO: E2008-0337 2008/02/14
DRWN: LKIERNAN 2008/02/15
CH'KD: 2008/02/15
APPR: BMAGUIRE
DESCRIPTION
REV N

QUALITY SYMBOLS
▼ =
▽C =

GENERAL TOLERANCES (UNLESS SPECIFIED)

	mm	INCH
4 PLACES	± ---	± ---
3 PLACES	± ---	± ---
2 PLACES	± ---	± ---
1 PLACE	± ---	± ---
ANGULAR ±---°		

DRAFT WHERE APPLICABLE MUST REMAIN WITHIN DIMENSIONS

DIMENSION STYLE: MM ONLY
SCALE: 4:1
DESIGN UNITS: METRIC
THIRD ANGLE PROJECTION

DRAWN BY: DB DATE: 16/7/87
CHECKED BY DATE
APPROVED BY DATE

TITLE: C GRID III DUAL ROW STRAIGHT PIN HEADER

molex MOLEX INCORPORATED

MATERIAL NO.: SEE CHART
DOCUMENT NO.: SDA-90131
SHEET NO.: 1 OF 7
SIZE A3

THIS DRAWING CONTAINS INFORMATION THAT IS PROPRIETARY TO MOLEX INCORPORATED AND SHOULD NOT BE USED WITHOUT WRITTEN PERMISSION

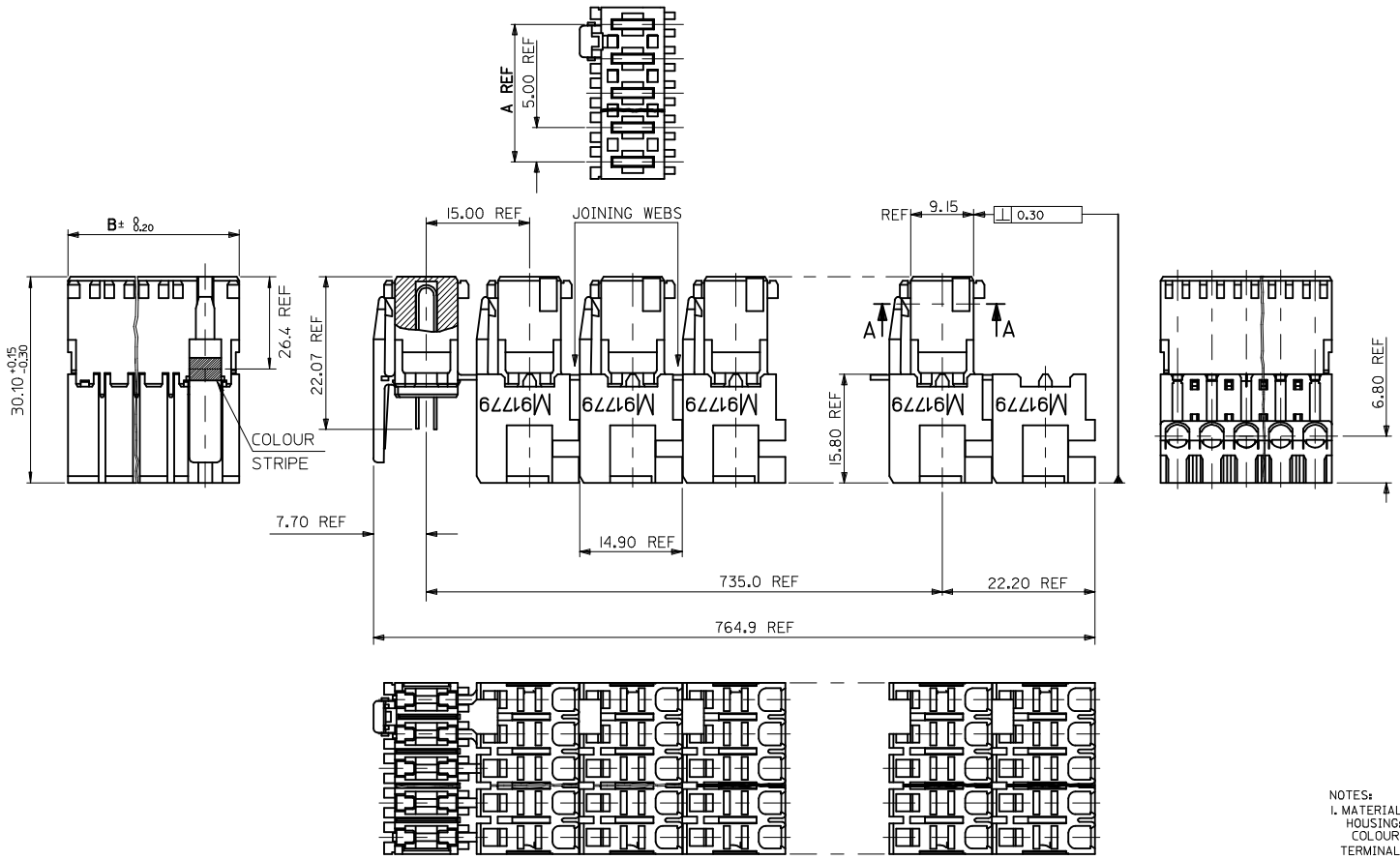

CKT SIZE	A	B
2	5.00	9.90
3	10.00	14.90
4	15.00	19.90

NOTES:

1. MATERIALS:
   HOUSING: PA 6, UL94 V-2
   COLOUR: SEE SHEET 2
   TERMINAL: PHOSPHOR BRONZE, (0.50)/.020 THICK REF
   PLATING: (2 um)/79 uIn MIN SILVER IN CONTACT AREA
   (0.10 um)/.004 uIn MIN SILVER FLASH ALLOVER
2. PRODUCT CONFORMS TO SPECIFICATION PS-99020-0037
3. ACCEPTS CABLE, PER ES-99036-0010
4. SEE SUBSEQUENT SHEETS FOR PART NUMBERS SHOWING THE VARIOUS CODING, KEYING AND LATCHING OPTIONS.
5. PACKAGING SPECIFICATION PK-90833-001
6. APPLICATION SPECIFICATION AS-99033-0004

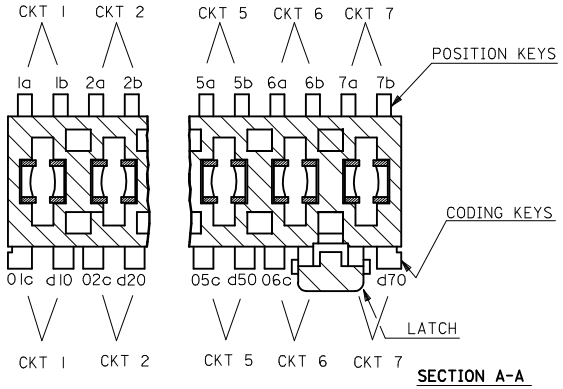

KEYING, CODING, & LATCH IDENTIFICATION

(7 CKT EXAMPLE SHOWN)

ADDED PART NUMBERS
EC NO: IPG2014-1233 2014/01/06
DRWN:CMONAHAN
CHKD:
APPR:STGRIFFIN 2014/01/20
DESCRIPTION
REV AC

QUALITY SYMBOLS
▼=0
Ⓒ=0

GENERAL TOLERANCES (UNLESS SPECIFIED)

	mm	INCH
4 PLACES	± ---	± ---
3 PLACES	± ---	± ---
2 PLACES	± 0.05	± ---
1 PLACE	± 0.1	± ---
ANGULAR ±---°		

DRAFT WHERE APPLICABLE MUST REMAIN WITHIN DIMENSIONS

DIMENSION STYLE: MM ONLY
SCALE: 1:1
DESIGN UNITS: METRIC
THIRD ANGLE PROJECTION

DRAWN BY: GMCSWEEN DATE: 2004/10/14
CHECKED BY: BMAGUIE DATE: 2005/01/07
APPROVED BY: BMAGUIRE DATE: 2010/10/20
MATERIAL NO.: SEE FOLLOWING SHEETS

TITLE: RAST 5 INDIRECT FEMALE ASSEMBLY 16 AMPS

MOLEX INCORPORATED

DOCUMENT NO.: SD-91779-001
SHEET NO.: 1 OF 5

SIZE A2

THIS DRAWING CONTAINS INFORMATION THAT IS PROPRIETARY TO MOLEX INCORPORATED AND SHOULD NOT BE USED WITHOUT WRITTEN PERMISSION

MOLEX PART NO.	HOUSING NO.	CIRCUIT SIZE	COLOUR	POSITION KEYS	CODING KEYS	LATCH POSITION	CONFIGURATION	COLOUR STRIP	REF.
91779-0001	91779-9001	2	NATURAL	1a, 1b 2a, 2b	01c, d20	1/2		NONE	K00
91779-0002	91779-9001	2	NATURAL	1b, 2a	01c, d20	1/2		NONE	K01
91779-0003	91779-9001	2	NATURAL	1a, 2b	d20	1/2		NONE	K05
91779-0004	91779-9001	2	NATURAL	1a	01c, d20	1/2		NONE	K12
91779-0005	91779-9001	2	NATURAL	1a, 2b	01c, d20	1/2		BLUE	K48
91779-0006	91779-9004	2	RED	1a, 1b 2a, 2b	NONE	1/2		NONE	K41
91779-0007	91779-9001	2	NATURAL	2a	01c	1/2		NONE	K42
91779-0008	91779-9004	2	RED	1a, 1b 2a, 2b	d20	1/2		NONE	K34
91779-0009	PART NUMBER OBSOLETE. REPLACED WITH 91779-0006.								
91779-0010	91779-9003	2	BLACK	1a, 1b 2a, 2b	NONE	1/2		NONE	K41
91779-0011	91779-9001	2	NATURAL	1a	d20	1/2		NONE	K66
91779-0012	91779-9001	2	NATURAL	1b	01c, d20	1/2		NONE	K16
91779-0013	91779-9001	2	NATURAL	1a	NONE	1/2		NONE	K70
91779-0014	91779-9001	2	NATURAL	1b 2a 2b	d20	1/2		NONE	K--
91779-0015	91779-9001	2	NATURAL	1a, 1b 2a, 2b	d20	1/2		NONE	K34
91779-0016	91779-9001	2	NATURAL	1a, 1b 2a, 2b	01c	1/2		NONE	K33
91779-0017	91779-9004	2	RED	1a 1b 2b	NONE	1/2		NONE	K43
91779-0018	91779-9001	2	NATURAL	1b 2b	01c	1/2		NONE	K09
91779-0019	91779-9001	2	NATURAL	1b 2b	01c	1/2		GREEN	K--
91779-0020	91779-9001	2	NATURAL	1a 2b	d20	1/2		GREEN	K--
91779-0021	91779-9001	2	NATURAL	2a	01c, d20	1/2		BLACK	K--
91779-0022	91779-9001	2	NATURAL	1b	d20	1/2		RED	K--
91779-0023	91779-9001	2	NATURAL	1b 2b	01c	1/2		BLUE	K--

MOLEX PART NO.	HOUSING NO.	CIRCUIT SIZE	COLOUR	POSITION KEYS	CODING KEYS	LATCH POSITION	CONFIGURATION	colour stripe	REF.
91779-0024	91779-9001	2	NATURAL	1b 2b	01c	1/2		ORANGE	K--
91779-0025	91779-9001	2	NATURAL	1a 1b	d20	1/2		NONE	K--
91779-0026	91779-9001	2	NATURAL	1a 2b	01c	1/2		NONE	K--
91779-0027	91779-9003	2	BLACK	1a 2b	NONE	1/2		NONE	K06
91779-0028	91779-9004	2	RED	2a 2b	NONE	1/2		NONE	K31
91779-0029	91779-9001	2	NATURAL	NONE	01c, d20	1/2		NONE	K--
91779-0030	91779-9001	2	NATURAL	1a 2a 2b	01c, d20	1/2		NONE	K62
91779-0031	91779-9001	2	NATURAL	1a 2a	01c, d20	1/2		NONE	K--
91779-0032	91779-9001	2	NATURAL	1b 2b	01c, d20	1/2		NONE	K--
91779-0033	91779-9001	2	NATURAL	1a, 1b 2a, 2b	01c, d20	1/2		RED	K09
91779-0034	91779-9001	2	NATURAL	1a, 1b 2a, 2b	01c, d20	1/2		GREEN	K--
91779-0035	91779-9001	2	NATURAL	2b	NONE	1/2		NONE	K--
91779-0036	91779-9001	2	NATURAL	1a, 1b 2a, 2b	NONE	1/2		NONE	K41
91779-0038	91779-9001	2	NATURAL	1b	NONE	1/2		NONE	K--

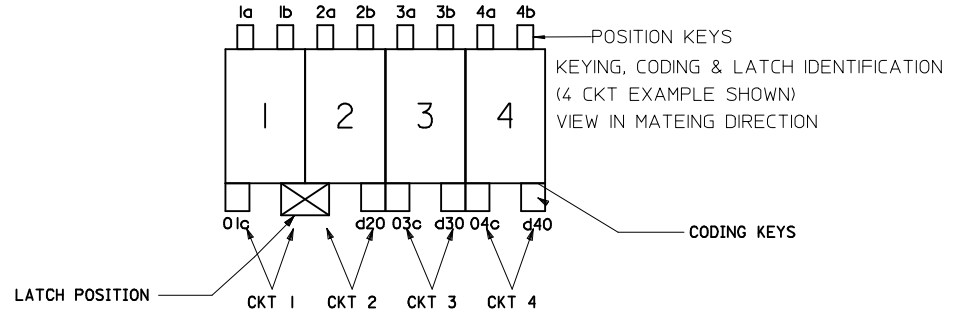

SEE SHEET 1
EC NO: IPG2014-1233 2014/01/06
DRWN:CMONAHAN
CHKD:
APPR:STGRIFFIN 2014/01/20
DESCRIPTION
REV
AC

QUALITY SYMBOLS
▼=0
Ⓒ=0

GENERAL TOLERANCES (UNLESS SPECIFIED)

	mm	INCH
4 PLACES	± ---	± ---
3 PLACES	± ---	± ---
2 PLACES	± 0.05	± ---
1 PLACE	± 0.1	± ---
ANGULAR ±---°		

DRAFT WHERE APPLICABLE MUST REMAIN WITHIN DIMENSIONS

DIMENSION STYLE: MM ONLY
SCALE: 2:1
DESIGN UNITS: METRIC
THIRD ANGLE PROJECTION

DRAWN BY: GMCSWEEN DATE: 2004/10/14
CHECKED BY: BMAGUIE DATE: 2005/01/07
APPROVED BY: BMAGUIRE DATE: 2010/10/20

TITLE: RAST 5 INDIRECT FEMALE ASSEMBLY 16 AMPS

molex MOLEX INCORPORATED

MATERIAL NO.: SEE TABLES
DOCUMENT NO.: SD-91779-001
SHEET NO.: 2 OF 5
SIZE: A2

THIS DRAWING CONTAINS INFORMATION THAT IS PROPRIETARY TO MOLEX INCORPORATED AND SHOULD NOT BE USED WITHOUT WRITTEN PERMISSION

CIRCUIT 2 CONTIN'D									
MOLEX PART NO.	HOUSING NO.	CIRCUIT SIZE	COLOUR	POSITION KEYS	CODING KEYS	LATCH POSITION	CONFIGURATION	COLOUR STRIPE	REF.
91779-0039	91779-9001	2	NATURAL	1a 2b	NONE	1/2	1 2	NONE	K06

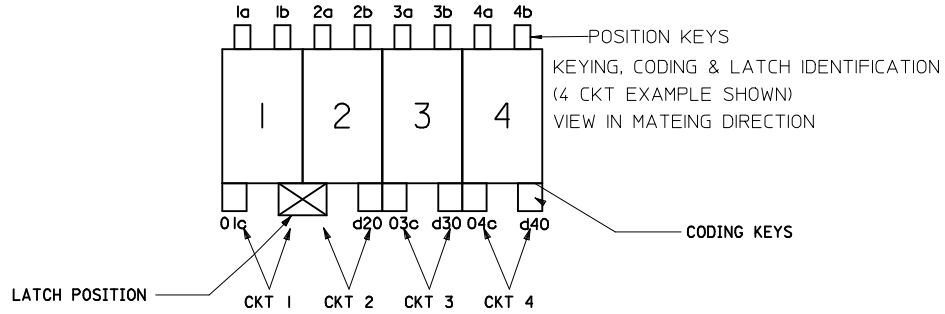

SEE SHEET 1 EC NO: IPG2014-1233 DRWN:CMONAHAN 2014/01/06 CHKD: APPR:STGRIFFIN 2014/01/20 DESCRIPTION REV AC	QUALITY SYMBOLS ▼=0 (C)=0	GENERAL TOLERANCES (UNLESS SPECIFIED) mm / INCH 4 PLACES ± --- / ± --- 3 PLACES ± --- / ± --- 2 PLACES ± 0.05 / ± --- 1 PLACE ± 0.1 / ± --- 0 PLACE ± / ± ANGULAR ±---° DRAFT WHERE APPLICABLE MUST REMAIN WITHIN DIMENSIONS	DIMENSION STYLE MM ONLY DRAWN BY GMCSWEEN DATE 2004/10/14 CHECKED BY BMAGUIE DATE 2005/01/07 APPROVED BY BMAGUIRE DATE 2010/10/20 MATERIAL NO. SEE TABLES	SCALE 1:1 DESIGN UNITS METRIC THIRD ANGLE PROJECTION TITLE RAST 5 INDIRECT FEMALE ASSEMBLY 16 AMPS molex DOCUMENT NO. SD-91779-001 SHEET NO. 3 OF 5	SIZE A2	THIS DRAWING CONTAINS INFORMATION THAT IS PROPRIETARY TO MOLEX INCORPORATED AND SHOULD NOT BE USED WITHOUT WRITTEN PERMISSION

MOLEX PART NO.	HOUSING NO.	CIRCUIT SIZE	COLOUR	POSITION KEYS	CODING KEYS	LATCH POSITION	CONFIGURATION	COLOUR STRIP	REF.
91779-0101	91779-9101	3	NATURAL	1a 1b 2a 2b 3a 3b	01c d20 03c d30	1/2	1 2 3	NONE	K00
91779-0102	91779-9102	3	NATURAL	1a 1b 2a 2b 3a 3b	01c d10 02c d30	2/3	1 2 3	NONE	K90
91779-0103	91779-9101	3	NATURAL	1b	01c d20	1/2	1 2 3	NONE	K01
91779-0104	91779-9102	3	NATURAL	2a	d10 d30	2/3	1 2 3	NONE	K44
91779-0105	91779-9102	3	NATURAL	3b	02c d30	2/3	1 2 3	NONE	K--
91779-0106	91779-9101	3	NATURAL	NONE	NONE	1/2	1 2 3	NONE	k59
91779-0107	91779-9101	3	NATURAL	1b	01c d20	1/2	1 2 3	RED	k01
91779-0108	91779-9101	3	NATURAL	1a	01c d20	1/2	1 2 3	NONE	K154
91779-0109	91779-9103	3	RED	1a 1b 2a 2b 3a 3b	NONE	2/3	1 2 3	NONE	K39
91779-0110	91779-9103	3	RED	2b 3b	d10	2/3	1 2 3	NONE	K84
91779-0111	91779-9102	3	NATURAL	2b 3a	d10, d30	2/3	1 2 3	NONE	K--
91779-0112	PART NUMBER OBSOLETE, REPLACED WITH 91779-0109.								
91779-0113	91779-9103	3	RED	1a 1b 2a 2b 3a 3b	d10	2/3	1 2 3	NONE	K41
91779-0114	91779-9102	3	NATURAL	1a 1b 2a 2b 3a 3b	d10	2/3	1 2 3	NONE	K41
91779-0115	91779-9101	3	NATURAL	NONE	03C	1/2	1 2 3	NONE	K72
91779-0116	91779-9101	3	NATURAL	1a 1b	d30	1/2	1 2 3	NONE	K05
91779-0117	91779-9102	3	NATURAL	2a	d10 02c d30	2/3	1 2 3	NONE	K--
91779-0118	91779-9102	3	NATURAL	2a	d10	2/3	1 2 3	NONE	K--
91779-0119	91779-9101	3	NATURAL	2a	01c d30	1/2	1 2 3	NONE	K--

MOLEX PART NO.	HOUSING NO.	CIRCUIT SIZE	COLOUR	VOID CIRCUIT	POSITION KEYS	CODING KEYS	LATCH POSITION	CONFIGURATION	COLOUR STRIP	REF.
91779-0120	91779-9102	3	NATURAL	NONE	2b 3b	d30	2/3	1 2 3	NONE	K--
91779-0121	91779-9101	3	NATURAL	NONE	NONE	01c d30	1/2	1 2 3	NONE	K--
91779-0122	91779-9103	3	RED	NONE	1b 2a 2b 3b	NONE	2/3	1 2 3	NONE	k124
91779-0123	91779-9103	3	RED	2	2b 3b	d10	2/3	1 V 3	NONE	k84
91779-0124	91779-9102	3	NATURAL	NONE	NONE	d10 02c d30	2/3	1 2 3	NONE	K--
91779-0126	91779-9101	3	NATURAL	NONE	3b	01c d30	1/2	1 2 3	NONE	K--
91779-0127	91779-9102	3	NATURAL	NONE	1a 2a 3b	d10 d30	2/3	1 2 3	NONE	k170
91779-0128	91779-9102	3	NATURAL	NONE	1a 2b	NONE	2/3	1 2 3	NONE	K--
91779-0129	91779-9102	3	NATURAL	NONE	1a 1b 2a 2b 3a 3b	01c d30	2/3	1 2 3	NONE	K--
91779-0130	91779-9101	3	NATURAL	NONE	1a 3b	01c	1/2	1 2 3	NONE	K--

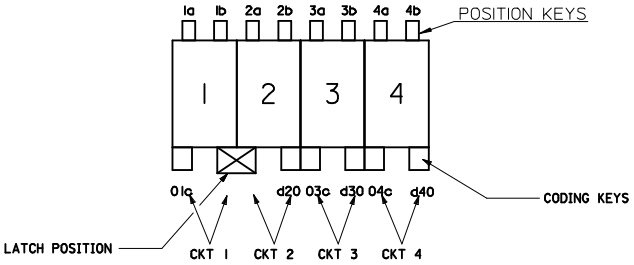

KEYING, CODING & LATCH IDENTIFICATION
(4 CKT EXAMPLE SHOWN)
VIEW IN MATING DIRECTION

SEE SHEET 1
EC NO: IPG2014-1233 2014/01/06
DRWN:CMONAHAN
CHKD:
APPR:STGRIFFIN 2014/01/20
DESCRIPTION
REV AC

QUALITY SYMBOLS
▼=0
▽=0

GENERAL TOLERANCES (UNLESS SPECIFIED)

	mm	INCH
4 PLACES	± ---	± ---
3 PLACES	± ---	± ---
2 PLACES	± 0.05	± ---
1 PLACE	± 0.1	± ---
ANGULAR ±---°		

DRAFT WHERE APPLICABLE MUST REMAIN WITHIN DIMENSIONS

DIMENSION STYLE: MM ONLY
SCALE: 2:1
DESIGN UNITS: METRIC
THIRD ANGLE PROJECTION

DRAWN BY: GMCSWEEN DATE: 2004/10/14
CHECKED BY: BMAGUIE DATE: 2005/01/07
APPROVED BY: BMAGUIRE DATE: 2010/10/20

TITLE: RAST 5 INDIRECT FEMALE ASSEMBLY 16 AMPS

molex MOLEX INCORPORATED

MATERIAL NO.: SEE TABLES
DOCUMENT NO.: SD-91779-001
SHEET NO.: 4 OF 5
SIZE: A2

THIS DRAWING CONTAINS INFORMATION THAT IS PROPRIETARY TO MOLEX INCORPORATED AND SHOULD NOT BE USED WITHOUT WRITTEN PERMISSION

MOLEX PART NO.	HOUSING NO.	CIRCUIT SIZE	COLOUR	POSITION KEYS	CODING KEYS	LATCH POSITION	CONFIGURATION	COLOUR STRIP	REF.
91779-0201	91779-9201	4	NATURAL	1a 1b 2a 2b 3a 3b 4a 4b	01c d20 03c d40	1/2 , 3/4		NONE	K00
91779-0202	91779-9201	4	NATURAL	1b	03c d40	1/2 , 3/4		NONE	K01
91779-0203	91779-9201	4	NATURAL	1a 3a 3b	01c d20 d40	1/2 , 3/4		NONE	K32
91779-0204	91779-9202	4	NATURAL	NONE	d20	1/2		NONE	K127
91779-0205	91779-9201	4	NATURAL	2a, 4b	d20	1/2, 3/4		NONE	K--
91779-0206	91779-9201	4	NATURAL	2b	d20	1/2, 3/4		NONE	K--
91779-0207	91779-9207	4	NATURAL	3a	01c d20 03c d40	3/4		NONE	K--
91779-0208	91779-9201	4	NATURAL	3a	01c d20 03c d40	1/2 3/4		NONE	K--
91779-0209	91779-9208	4	NATURAL	1a 2b 3b 4b	01c d10 02c d30 04c d40	2/3		NONE	K--
91779-0210	91779-9201	4	NATURAL	1a 1b 2b 3a 3b 4b	d20 d40	1/2 3/4		NONE	K--
91779-0211	91779-9201	4	NATURAL	2a 2b 3b 4b	01c d20 03c d40	1/2 3/4		NONE	K--
91779-0212	91779-9201	4	NATURAL	2a 3a 4b	01c	1/2 3/4		NONE	K--
91779-0213	91779-9202	4	NATURAL	2a 4b	01c d30	1/2		NONE	K--
91779-0214	91779-9202	4	NATURAL	1a 1b 2a 2b 3a 3b 4a 4b	01c d20 03c d30 04c d40	1/2		NONE	K--
91779-0215	91779-9201	4	NATURAL	1a 2b 3b	d40	1/2 3/4		NONE	K--

MOLEX PART NO.	HOUSING NO.	CIRCUIT SIZE	COLOUR	POSITION KEYS	CODING KEYS	LATCH POSITION	CONFIGURATION	COLOUR STRIP	REF.
91779-0216	91779-9201	4	NATURAL	1b 2a 3a 4b	01c d40	1/2 , 3/4		NONE	K--
91779-0217	PART NUMBER OBSOLETE. REPLACED WITH 91779-0205								
91779-0218	91779-9201	4	NATURAL	1a 1b 3a 3b	03c d40	1/2 , 3/4		NONE	K--
91779-0219	91779-9201	4	NATURAL	1b 2a 3a 4a	01c d20 03c	1/2 , 3/4		NONE	K--

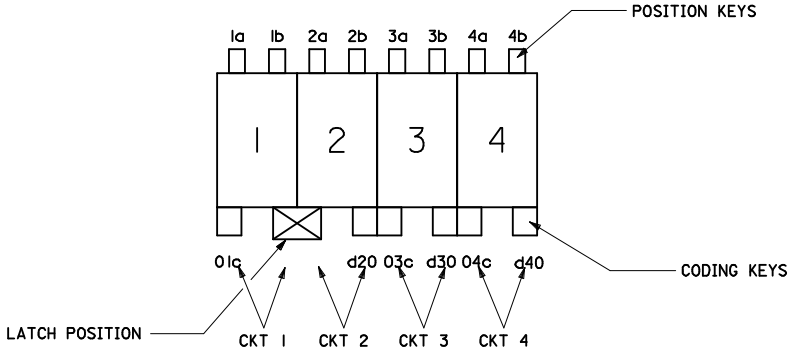

KEYING, CODING & LATCH IDENTIFICATION
(4 CKT EXAMPLE SHOWN)
VIEW IN MATING DIRECTION

SEE SHEET 1
EC NO: IPG2014-1233 2014/01/06
DRWN:CMONAHAN
CHKD:
APPR:STGRIFFIN 2014/01/20
DESCRIPTION
REV
AC

QUALITY SYMBOLS
▼=0
Ⓒ=0

GENERAL TOLERANCES (UNLESS SPECIFIED)

	mm	INCH
4 PLACES	± ---	± ---
3 PLACES	± ---	± ---
2 PLACES	± 0.05	± ---
1 PLACE	± 0.1	± ---
ANGULAR ±---°		

DRAFT WHERE APPLICABLE MUST REMAIN WITHIN DIMENSIONS

DIMENSION STYLE: MM ONLY
SCALE: 2:1
DESIGN UNITS: METRIC
THIRD ANGLE PROJECTION

DRAWN BY: GMCSWEEN DATE: 2004/10/14
CHECKED BY: BMAGUIE DATE: 2005/01/07
APPROVED BY: BMAGUIRE DATE: 2010/10/20

TITLE: RAST 5 INDIRECT FEMALE ASSEMBLY 16 AMPS

MOLEX INCORPORATED

MATERIAL NO.: SEE TABLES
DOCUMENT NO.: SD-91779-001
SHEET NO.: 5 OF 5
SIZE: A2

THIS DRAWING CONTAINS INFORMATION THAT IS PROPRIETARY TO MOLEX INCORPORATED AND SHOULD NOT BE USED WITHOUT WRITTEN PERMISSION