THIS DRAWING IS UNPUBLISHED. RELEASED FOR PUBLICATION
© COPYRIGHT BY TYCO ELECTRONICS CORPORATION. ALL RIGHTS RESERVED.

LOC	DIST
DS	–

REVISIONS

P	LTR	DESCRIPTION	DATE	DWN	APVD
	A	REVISED PER FC00-0252-04	14.OCT.'04	CH	CS
	A1	REVISED (ECR-09-008548)	16.APR.'09	KT	HG

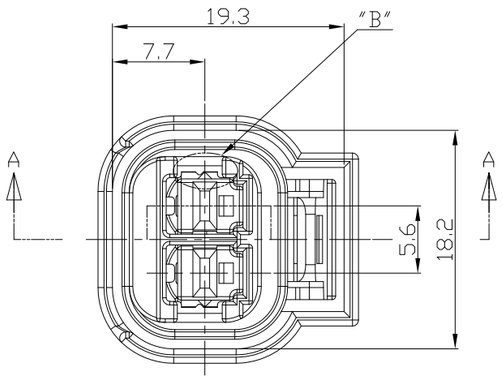

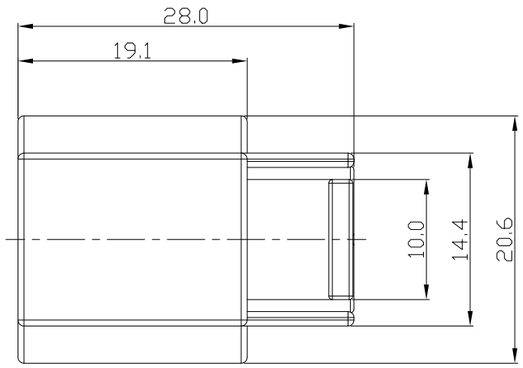

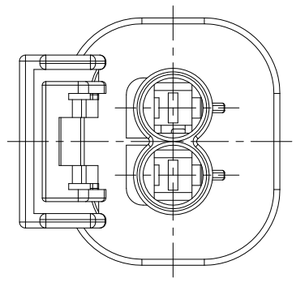

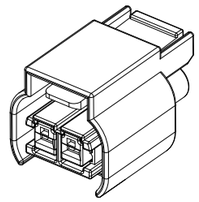

3D VIEW
(SCALE: 1/1)

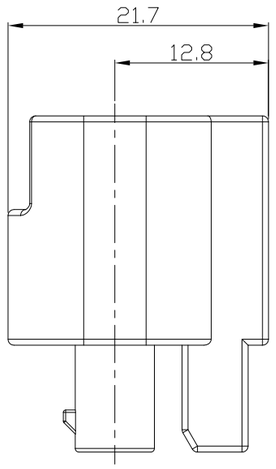

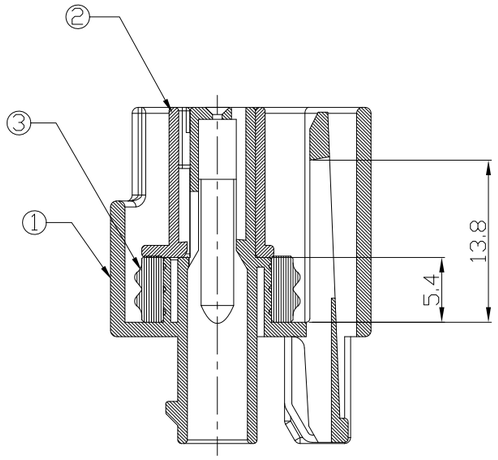

A-A

NOTES

1. CONDITION OF DELIVERY : DBL PLATE IN OPEN POSITION.
2. APPLIED RECEPTACLE CONTACT P/N:

CONTACT	JPT TERMINAL		
Part NO.	927772-3	927770-3	927766-3
WIRE SIZE(mm^2)	0.3	0.5-1.0	1.5-2.5

3. APPLIED MALE CONNECTOR P/N : 936291-1
4. APPLIED WIRE COVER HSG P/N : 936311-1
(CORRUGATOR DIA : ø5)

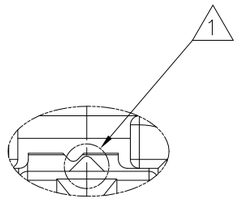

DETAIL "B"
SCALE 5:1

ASSY P/N 936248-2 (A1)

NO.	DESCRIPTION	P/N	MATERIAL	COLOR	QTY
3	INNER SEAL	936821-1	SILICON	RED ORANGE	1
2	DBL PLATE	936250-1	PBT GF10	WHITE	1
1	PLUG HSG	936249-1	PBT	BLACK	1

THIS DRAWING IS A CONTROLLED DOCUMENT FOR TYCO ELECTRONICS CORPORATION IT IS SUBJECT TO CHANGE AND THE CONTROLLING ENGINEERING ORGANIZATION SHOULD BE CONTACTED FOR THE LATEST REVISION.

DIMENSIONS: MM

TOLERANCES UNLESS OTHERWISE SPECIFIED:
0 <XX<10 ± 0.2
10<XX<30 ± 0.25
30<XX ± 0.3
ANGLES ± 3°

MATERIAL: SEE TABLE

FINISH:

DWN: KT JUNG
CHK: JW JUNG
APVD: HG CHO
PRODUCT SPEC: –
APPLICATION SPEC: –
WEIGHT: –

Tyco Electronics
AMP KOREA,
Kyungsan, Korea

NAME: .090 SEALED 2P PLUG ASS'Y

SIZE	CAGE CODE	DRAWING NO	RESTRICTED TO
A3	00779	C-936248	–

CUSTOMER DRAWING | SCALE 2/1 | SHEET 1 OF 1 | REV A1