THIS DRAWING IS UNPUBLISHED. RELEASED FOR PUBLICATION -,- .
© COPYRIGHT – TE Connectivity ALL RIGHTS RESERVED.

REVISIONS

P	LTR	DESCRIPTION	DATE	DWN	APVD
	D	REV PER ECR 05–018837	28DEC05	JR	TM
	D1	REVISED PER ECO–17–006294	10OCT2017	RS	DR

1. FOR ø9.398 [ø.370] MAX WIRE INSULATION.
2. MATERIAL: BODY; COPPER PER ASTM B152
   INSULATION; NYLON
   COLOR; BLACK
3. FINISH: BODY; TIN PL. PER ASTM B545.
4. NOTE DELETED.

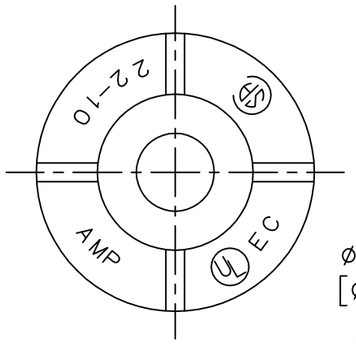

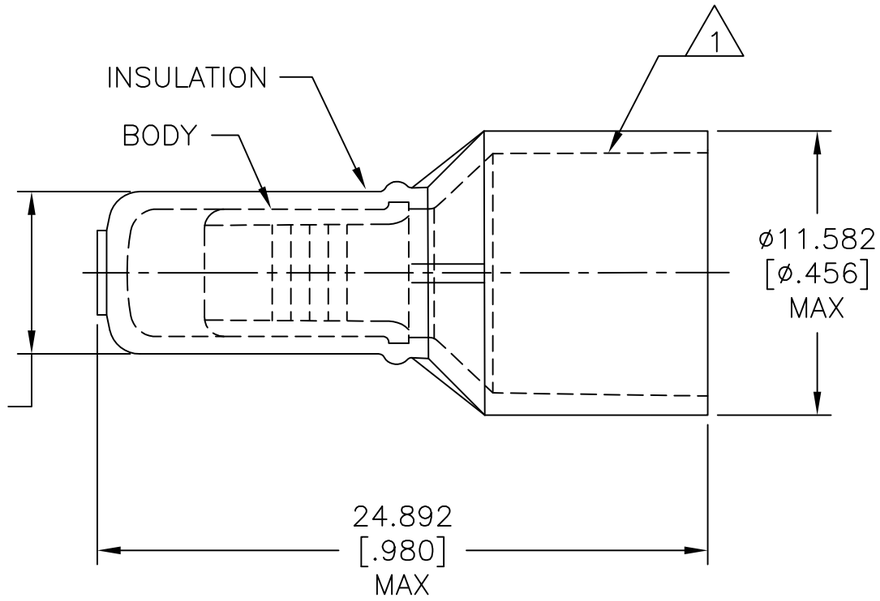

AMP WIRE RANGE	Listed	LR7189 Certified
22–10 AWG SOLID OR STRANDED	22–10 AWG SOLID OR STRANDED	22–10 AWG SOLID OR STRANDED

QTY	DESCRIPTION	PART NO
1000	LOOSE PIECE	55929–1

AMP INCORPORATED
CUSTOMER SERVICE SYSTEMS

FOR ADDITIONAL PRODUCT INFORMATION OR COPIES OF DRAWINGS AND TECHNICAL DOCUMENTS	PRODUCT INFORMATION CENTER 1–800–522–6752
FOR APPLICATION TOOLING INFORMATION	TOOLING ASSISTANCE CENTER 1–800–722–1111
FOR ORDER ENTRY	1–800–526–5142

THIS DRAWING IS A CONTROLLED DOCUMENT FOR AMP INCORPORATED. IT IS SUBJECT TO CHANGE AND THE CONTROLLING ENGINEERING ORGANIZATION SHOULD BE CONTACTED FOR THE LATEST REVISION.

MAX RECOMMENDED OPERATING TEMPERATURE: 150° C [302°F] MAX

VOLTAGE RATING: 600V MAX (BUILDING & WIRING) 1000V MAX (FIXTURES & SIGNS)

CIRCULAR MIL AREA: 1.65–6.64mm² [3248–13100] SOLID OR STRANDED

THIS DRAWING IS A CONTROLLED DOCUMENT.

DIMENSIONS: mm [INCHES]

TOLERANCES UNLESS OTHERWISE SPECIFIED:

0 PLC	± –
1 PLC	± –
2 PLC	± –
3 PLC	± 0.127[.005]
4 PLC	± –
ANGLES	± –

MATERIAL 2 FINISH 3

DWN	LEMUEL OLMEDA	3/10/93
CHK	R HERSEY	1/6/94
APVD	M ELLIS	1/6/94
PRODUCT SPEC	UL 486 C	
APPLICATION SPEC	–	
WEIGHT	–	

TE Connectivity

NAME: SPLICE, CLOSED–END, WIRE SIZE: 22–10 AWG

SIZE	CAGE CODE	DRAWING NO	RESTRICTED TO
A3	00779	C–55929	–

CUSTOMER DRAWING | SCALE 4:1 | SHEET 1 OF 1 | REV D1

1470–19 (1/15)