Low Voltage Limiter

Non-Time-Delay

ANL

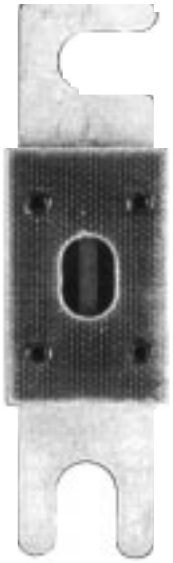

Dimensional Data

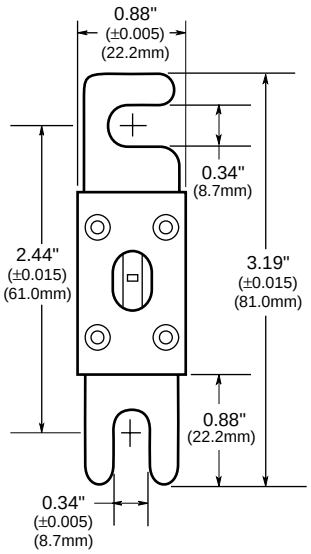

Time-Current Characteristic Curves–Average Melt

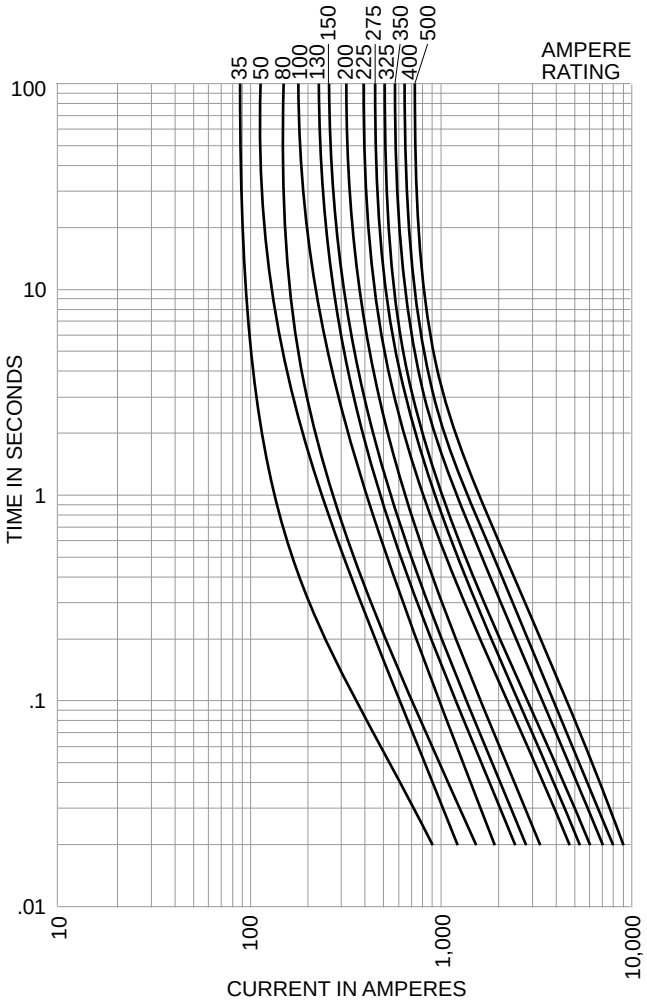

Catalog Symbol: ANL
Non-Time Delay
Ampere Rating: 35 to 750 Amperes
Voltage Rating: 32 Volts AC (or less)
80 Volts DC (or less)
Interrupting Rating: 6,000 Amperes AC,
2,700 Amperes DC
Agency Approvals:
U.L. Recognized, (600, 675 and 750 Amps only)
Guide JFHR2, File E56412

Electrical Ratings (Catalog Symbol and Amperes)

32 Volts AC IR 6000A			32 Volts AC IR 2700A
ANL-35	ANL-130	ANL-300	ANL-600
ANL-40	ANL-150	ANL-325	ANL-675
ANL-50	ANL-175	ANL-350	ANL-750
ANL-60	ANL-200	ANL-400	—
ANL-80	ANL-225	ANL-500	—
ANL-100	ANL-250	—	—
ANL-125	ANL-275	—	—

General Information:

- Isolates faults in equipment systems such as lifttrucks and other battery operated systems.
- Silver-plated copper link.
- Link element visible through mica window.

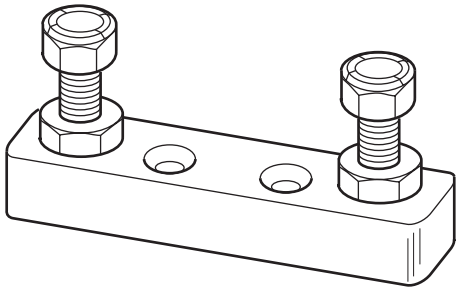

Fuseblock - 4164

The only controlled copy of this BIF document is the electronic read-only version located on the Bussmann Network Drive. All other copies of this document are by definition uncontrolled. This bulletin is intended to clearly present comprehensive product data and provide technical information that will help the end user with design applications. Bussmann reserves the right, without notice, to change design or construction of any products and to discontinue or limit distribution of any products. Bussmann also reserves the right to change or update, without notice, any technical information contained in this bulletin. Once a product has been selected, it should be tested by the user in all possible applications.