THIS DRAWING IS UNPUBLISHED. RELEASED FOR PUBLICATION -.- .
© COPYRIGHT - BY TYCO ELECTRONICS CORPORATION. ALL RIGHTS RESERVED.

LOC	DIST
DF	DO

REVISIONS

P	LTR	DESCRIPTION	DATE	DWN	APVD
	N	REV PER ECO-08-019991	22OCT08	PK	BW

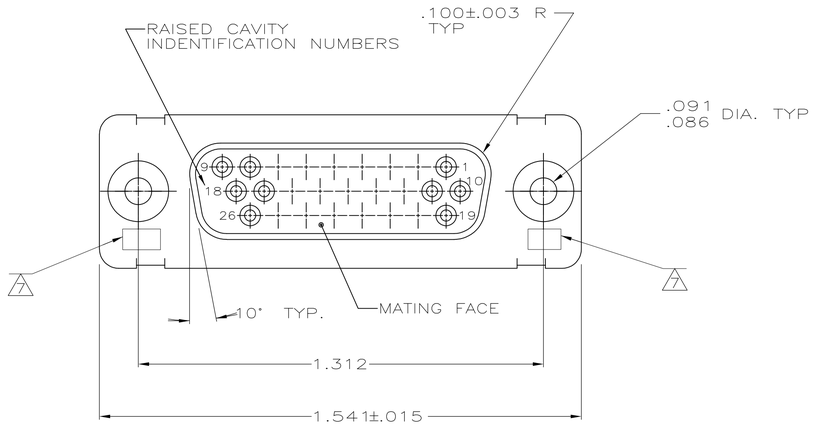

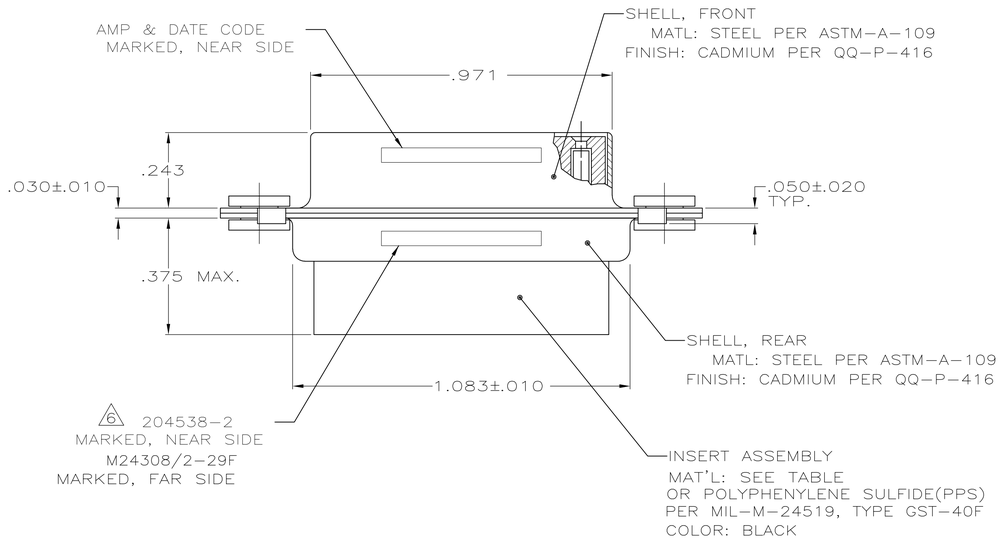

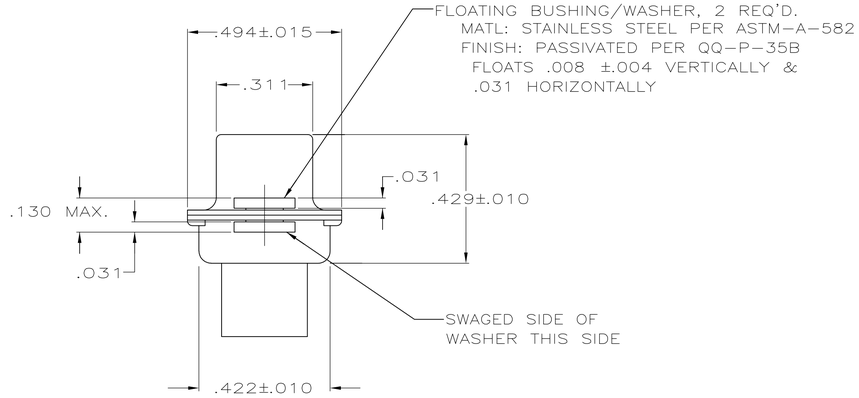

1. THIS RCPT. IS DESIGNED TO CONFORM TO THE LATEST ISSUE OF MIL-C-24308
2. MAX WIRE INSUL TO BE USED WITH THIS RCPT IS .054 DIA
3. METAL RETENTION CLIPS ARE INCLUDED IN INSERTS
4. PACKAGE MARKED M 24308/2-298F
5. THIS RCPT. WILL ACCEPT SIZE 22 SOCKET CONTACT M 24308/12 OR AMP # 204351

6 AMP PART NO. MARKED ON CONNECTOR REPRESENTS KIT NUMBER WITH CONTACTS

7 UL/CSA DESIGNATION MARKED IN THIS AREA.

OBSOLETE	PHENOLIC, COLOR: BLACK	204524-2
	POLYPHENELYENE SULFIDE (PPS) GST-40F PER MIL-M-24519 OR GLASS FILLED POLYESTER TPES013G30 PER ASTM D5927 COLOR, BLACK	204524-1
	INSERT MATERIAL	PART NO.

THIS DRAWING IS A CONTROLLED DOCUMENT.

DIMENSIONS: INCHES

TOLERANCES UNLESS OTHERWISE SPECIFIED:
0 PLC ± –
1 PLC ± –
2 PLC ± –
3 PLC ± .005
4 PLC ± –
ANGLES ± –

MATERIAL: SEE CALLOUTS
FINISH: SEE CALLOUTS

DWN C.C. THOMAS 12-3-87
CHK FC BALLEW III 1-25-88
APVD D.J.M. 1-25-88
PRODUCT SPEC –
APPLICATION SPEC –
WEIGHT –

Tyco Electronics
Tyco Electronics Corporation
Harrisburg, PA 17105-3608

NAME: AMPLIMITE RCPT. FOR SOCKET CONTACTS HI-DENSITY D CONN,SIZE 2, SERIES 90 WITH FLOAT BUSHINGS

SIZE	CAGE CODE	DRAWING NO	RESTRICTED TO
A1	00779	C-204526	–

CUSTOMER DRAWING | SCALE 4:1 | SHEET 1 OF 1 | REV N