THIS DRAWING IS UNPUBLISHED. RELEASED FOR PUBLICATION 20
© COPYRIGHT 20 BY TYCO ELECTRONICS CORPORATION. ALL RIGHTS RESERVED.

LOC	DIST
CM	00

REVISIONS

P	LTR	DESCRIPTION	DATE	DWN	APVD
	H	REVISED PER 0G3B-0257-01	20-APR-01	KW	CJ
	H1	ECO-07-028374	29NOV2007	KW	DC

1. PARTS COMPLY WITH AMP SOLDERABILITY SPEC.109-11-2.

2. CIRCUIT IDENTIFICATION CHARACTERS ARE ADJACENT TO THE INDICATED CAVITIES, BUT LOCATION AND ORIENTATION MAY DIFFER FROM PRINT.

3. CONTACT IS PLATED OVERALL WITH 0.00127 [.000050] NICKEL, THEN 0.00076 [.000030] GOLD OVER CONTACT LENGTH INDICATED AND MATTE TIN ON SOLDER TAIL END.

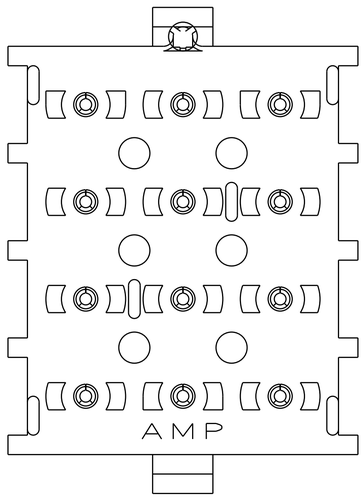

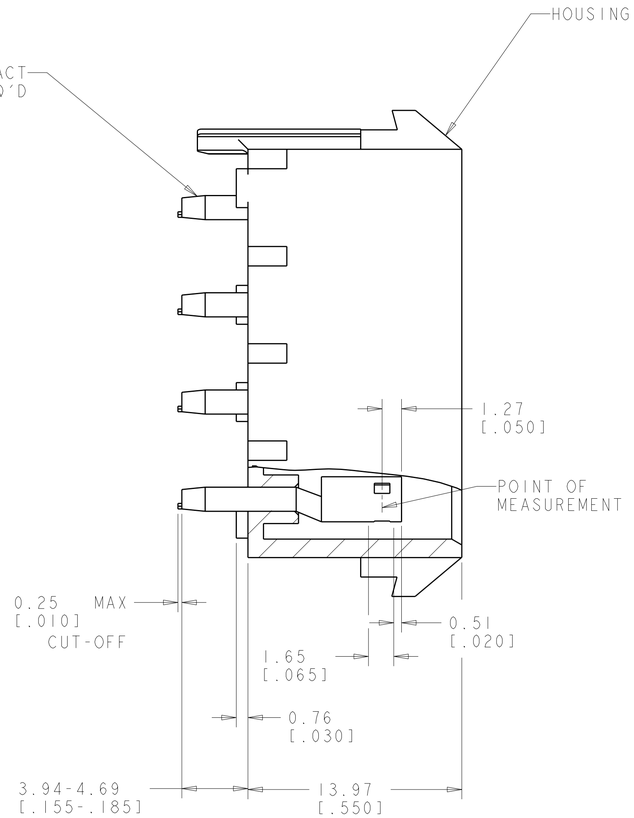

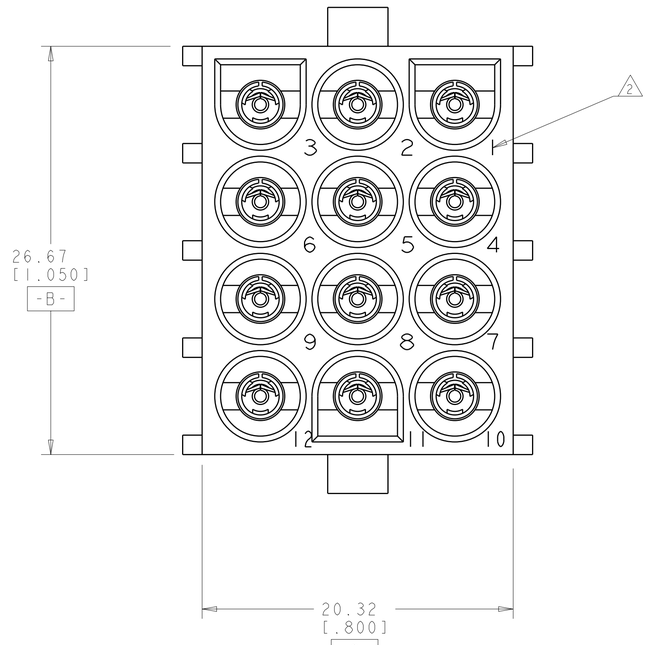

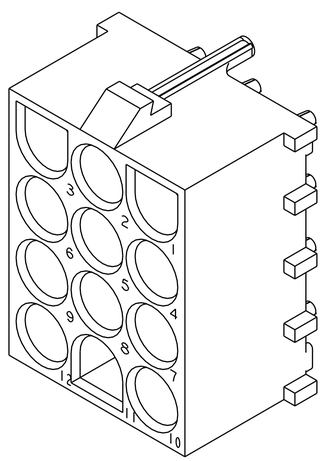

3 DIMENSIONAL MODEL
SCALE 4:1

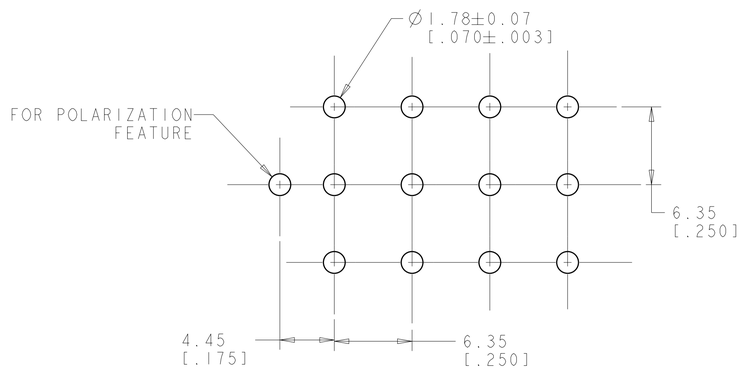

RECOMMENDED LAYOUT FOR
1.57[.062] THICK P.C. BOARD

MATERIAL	FINISH	MATERIAL	COLOR	PART NO
PH BRZ	GOLD 3	NYLON,94V-0	BLACK	643428-3
PH BRZ	PRE-TIN	NYLON,94V-0	BLACK	643428-2
PH BRZ	PRE-TIN	NYLON,94V-0	WHITE	643428-1
PIN		HOUSING		

THIS DRAWING IS A CONTROLLED DOCUMENT FOR TYCO ELECTRONICS CORPORATION. IT IS SUBJECT TO CHANGE AND THE CONTROLLING ENGINEERING ORGANIZATION SHOULD BE CONTACTED FOR THE LATEST REVISION.

DIMENSIONS: mm[INCHES]

TOLERANCES UNLESS OTHERWISE SPECIFIED:
0 PLC ±-
1 PLC ±-
2 PLC ±0.13[.005]
3 PLC ±-
4 PLC ±-
ANGLES ±-

MATERIAL SEE TABLE
FINISH SEE TABLE

METRIC

DWN K WHITAKER 01DEC2000
CHK S RIDGILL 01DEC2000
APVD S RIDGILL 01DEC2000

PRODUCT SPEC -
APPLICATION SPEC -
WEIGHT -

Tyco Electronics
Tyco Electronics
Harrisburg, PA 17105-3608

NAME HEADER ASSEMBLY,SOCKET, POLARIZED, 12 CIRCUIT, UNIVERSAL MATE-N-LOK(TM)

SIZE	CAGE CODE	DRAWING NO	RESTRICTED TO
A1	00779	C-643428	-

CUSTOMER DRAWING SCALE 4:1 SHEET 1 OF 1 REV H1

AMP 4805 REV 31MAR2000
Pro/ENGINEER DRAWING