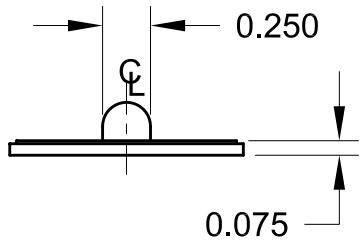


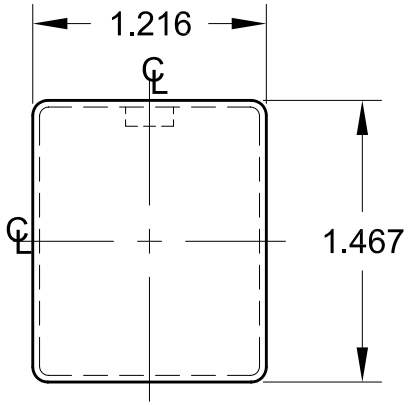


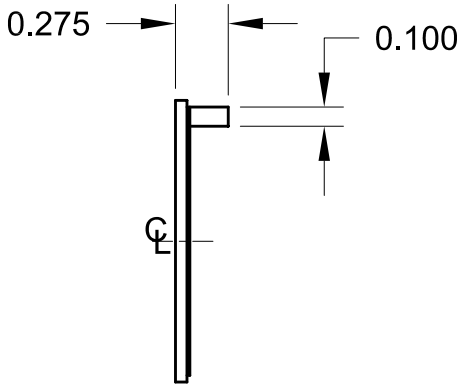


NOTE:
1.) COVER SOLD SEPARATELY.



| REV | DESCRIPTION | BY | CHK | DATE |
|---|---|---|---|---|
| | | | | |
| | | | | |
| | | | | |
| | | | | |
| | | | | |

POLYCASE™
YOUR PERFECT FIT

TOLERANCES UNLESS OTHERWISE SPECIFIED
X.XX ±.020
X.XXX ±.010

1305 CHESTER IND. PARKWAY AVON, OHIO 44011 U.S.A.
PH# 1-800-248-1233, 440-934-0444 FAX# 440-934-0088

THIS DRAWING AND THE INFORMATION CONTAINED ARE THE PROPERTY OF PLYCASE AND IT IS NOT TO BE REPRODUCED, COPIED OR USED IN ANY WAY DETRIMENTAL TO THE INTEREST OF POLYCASE.

| DRWN BY | APP. BY | SCALE: | DATE: |
|---|---|---|---|
| M.M.T. | B.B. | FULL | 07/07/00 |

JOB NO: - -

PRODUCT: - C-1201-N

CUSTOMER:

TITLE: PRODUCT DETAIL DRAWING