ROHS COMPLIANT

PRODUCT DATA DRAWING

REVISION HISTORY			
REV	DESCRIPTION	DATE	APPROVED
-	DCN 35547	11/07	STW

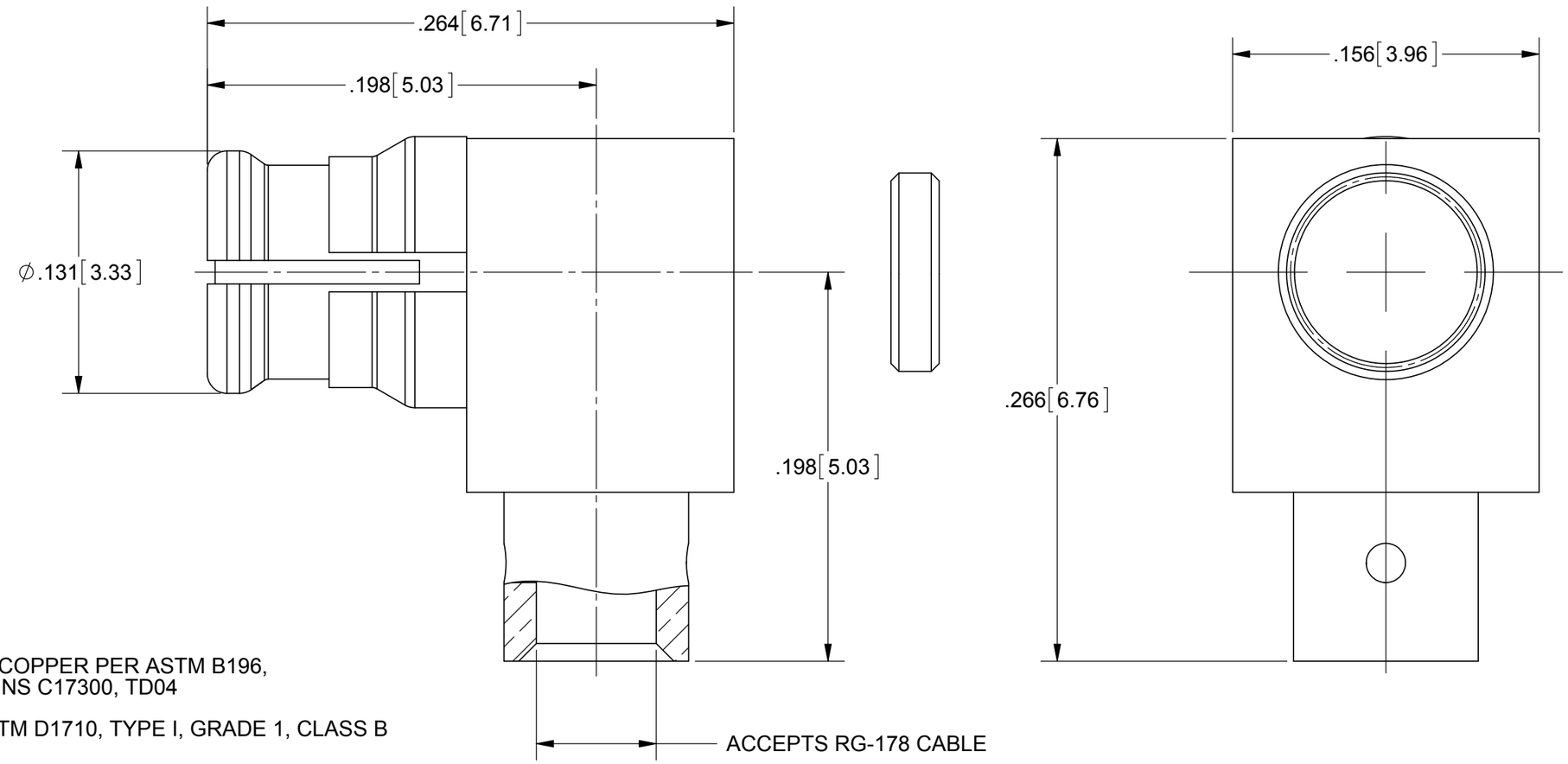

MATERIAL:

BODIES, CONTACT
EMI RING, CAP &
ANTI-ROCK RING: BERYLLIUM COPPER PER ASTM B196, ALLOY No. UNS C17300, TD04

INSULATOR: PTFE PER ASTM D1710, TYPE I, GRADE 1, CLASS B

FINISH:

BODIES, CONTACT
EMI RING CAP &
ALIGNMENT RING: GOLD PER ASTM B 488, TYPE II, CODE C, CLASS 1.27; OVER NICKEL PER AMS-QQ-N-290, CLASS 1, .00005" MIN.

PERFORMANCE:

IMPEDANCE:	50 OHMS
FREQ. RANGE:	DC TO 3.0 GHz
VSWR:	1.30:1 DC TO 3.0 GHz
INSERTION LOSS:	.12 X SQRT(F(F IN GHz))
DWV:	500 VRMS
OPERATING TEMP.:	-55˚C TO +125˚C
INSUL. RES.:	5000 MEGOHMS.

MATERIAL: SEE NOTES

FINISH: SEE NOTES

SURFACE AREA: N/A

PROPRIETARY

THE INFORMATION CONTAINED IN THIS DRAWING IS THE SOLE PROPERTY OF SV MICROWAVE, INC. ANY REPRODUCTION IN PART OR AS A WHOLE WITHOUT THE WRITTEN PERMISSION OF SV MICROWAVE, INC IS PROHIBITED.

DIMENSIONS ARE IN INCHES TOLERANCES:

FRACTIONAL: ±1/64 ANGULAR: X° ±1°0' X°X' ±15'

DECIMAL: .X ±.030 .XX ±.010 .XXX ±.005

INTERPRET DIMENSIONS AND TOLERANCES PER ASME Y14.5M - 1994

THIRD ANGLE PROJECTION

UNLESS OTHERWISE SPECIFIED

1) ALL DIMENSIONS ARE IN INCHES [MILLIMETERS]
2) ALL DIMENSIONS ARE AFTER PLATING.
3) BREAK CORNERS & EDGES .005 R. MAX.
4) CHAM. 1ST & LAST THREADS.
5) SURFACE ROUGHNESS 63₳ MIL-STD-10.
6) DIA.'S ON COMMON CENTERS TO BE CONCENTRIC WITHIN .005 T.I.R.
7) REMOVE ALL BURRS

DRAWN:	HLP	11/29/07
CHECKED:	STW	11/29/07
APPROVED:	STW	11/29/07

SV Microwave, Inc.
2400 Centrepark West Drive, Suite 100
West Palm Beach, FL 33409

TITLE: R/A SMP JACK FOR RG-178 CABLE

SIZE	CAGE CODE	DWG. NO.
B	95077	1222-4006

SCALE: 15:1 SHEET 1 OF 1