MATERIAL NUMBER	OLD PART NUMBER
120113-0023	BNY401P-FBC

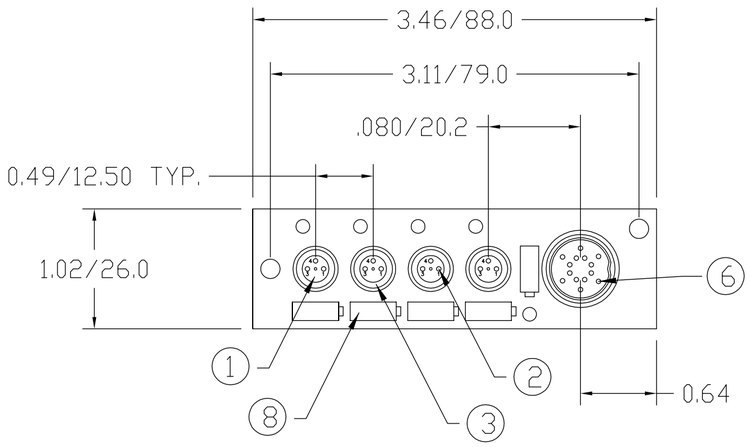

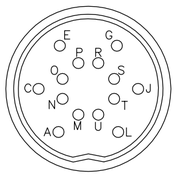

FACE VIEW OF CONNECTOR

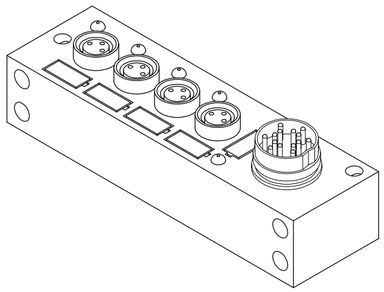

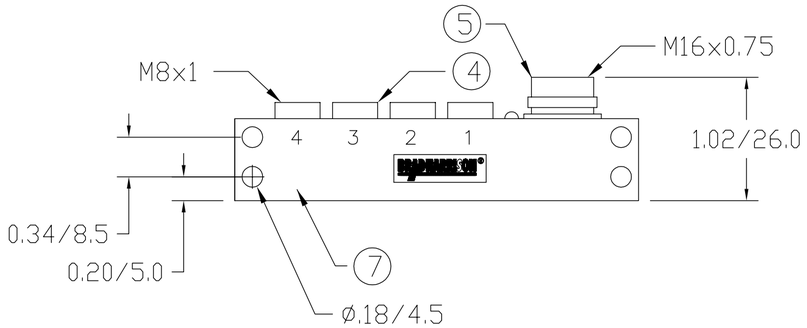

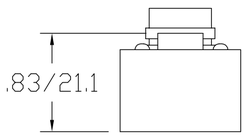

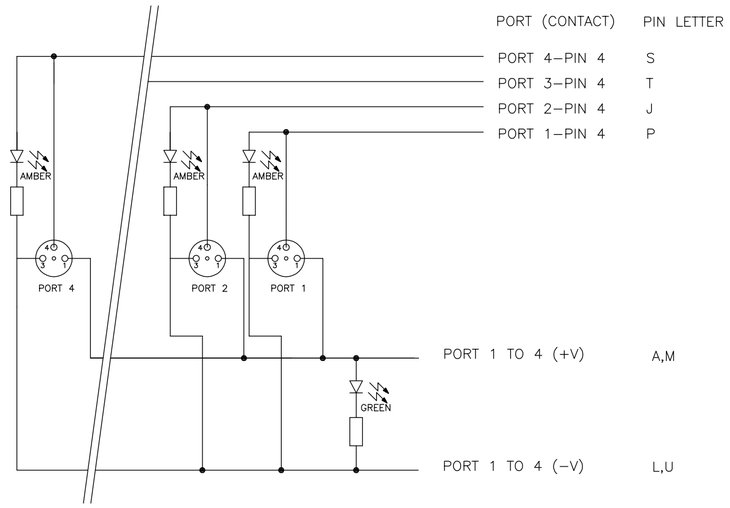

WIRING DIAGRAM

ITEM	COMPONENT	MATERIAL	FINISH
1	INSERT	POLYESTER	YELLOW
2	M8 CONTACT SOCKET	COPPER ALLOY	GOLD OVER NICKEL
3	O-RING	VITON	RED
4	M8 RECEPTACLE SHELL	BRASS	NICKEL PLATED
5	M16 RECEPTACLE SHELL	BRASS	NICKEL PLATED
6	M16 PIN CONTACT	BRASS	GOLD OVER NICKEL
7	HOUSING	NYLON	YELLOW
8	LABEL	ABS	WHITE

VOLTAGE RATING	10-30 VDC
AMPERAGE RATING PER PORT	2 AMPS
PROTECTION	IP67
OPERATING TEMPERATURE	-20°C TO 90°C

RELEASD DRAWING
EC NO: WEU2010-0058
DRWN: LHARTMAN 8/21/09
CH'KD: BWOODMAN 2009/08/21
APPR: JFMURPHY 2009/08/21
DESCRIPTION
REV A

QUALITY SYMBOL
▼=0
C=0

GENERAL TOLERANCES (UNLESS SPECIFIED)

	mm	INCH
4 PLACES	±----	±----
3 PLACES	±----	±----
2 PLACES	±----	±.01
1 PLACE	±0.3	±----
ANGULAR ±----°		

DRAFT WHERE APPLICABLE MUST REMAIN WITHIN DIMENSIONS

DIMENSION STYLE: IN/MM
SCALE: NTS
DESIGN UNITS: METRIC
THIRD ANGLE PROJECTION

DRAWN BY: LHARTMAN DATE: 2009/08/21
CHECKED BY: BWOODMAN DATE: 2009/08/21
APPROVED BY: ---- DATE: ----

TITLE
NANO-CHANGE MPIS
8 PORT PNP CONNECTORIZD
14 POLE M16 CONNECTOR

molex MOLEX INCORPORATED

MATERIAL NO.: SEE CHART
DOCUMENT NO.: SD-120113-008
SHEET NO.: 1 0F 1
SIZE: C

THIS DRAWING CONTAINS INFORMATION THAT IS PROPRIETARY TO MOLEX INCORPORATED AND SHOULD NOT BE USED WITHOUT WRITTEN PERMISSION