REVISIONS		
ISS	ZONE	DESCRIPTION\PER REQUEST\DATE
B	A-3	NO.4 WAS CHANGED\RD-DM91010401W\01-04-02'
C	A-3	NO.1 AND NO.2 WERE CHANGED\N/A\02-21-02'
D	C-8	NO.6 WAS CHANGED\RD-DM91031401L\03-14-02'
E	C-8	NO.6 WAS CHANGED\RD-DM91080601L\08-06-02'
F	C-8	NO.6 WAS CHANGED\RD-DM91092501L\09-25-02'
F1	B-6	CANCELLED L AND M KEY CODING\N/A\02-13-03'
F2	B-1	NOTE 8 WAS CHANGED\N/A\05-15-03'

CONFIGURATION CONTROL:
NO CHANGES PERMITTED TO DRAWING WITHOUT PPAP QUALIFIED CUSTOMER APPROVAL

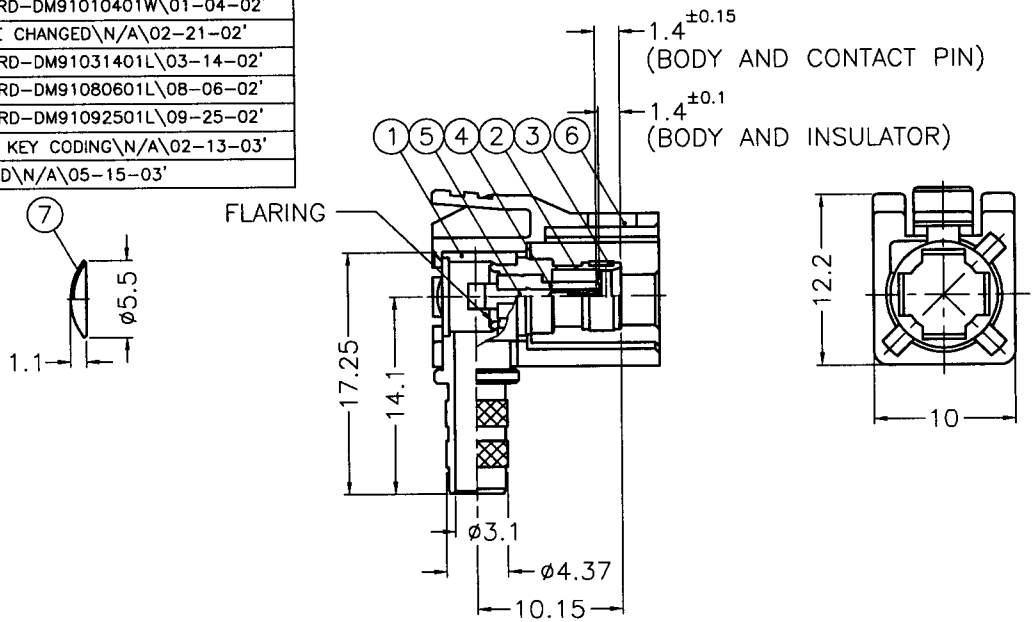

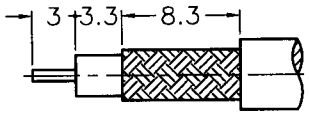

RECOMMENDED CABLE STRIPPING DIM'S

1. CRIMPED FERRULE HEX CRIMP SIZE .213"
2. CONTACT PIN TO SOLDER

NOTES: FINISH (PLATING THICKNESS IN MICRO-INCHES)
1. BRASS PER QQ-B-626, ALLOY 360, 1/2 H ; JIS H3250 C 3604BD OR EQUIVALENT
2. BERYLLIUM COPPER PER QQ-C-530, ALLOY 173, 1/2 H ; ASTM B-196 ; FUJII FX301 OR EQUIVALENT
3. BERYLLIUM COPPER JIS C1720R-1/4H ; ASTM B-194 OR EQUIVALENT
4. NICKEL PL. 60 MIN. THICK OVER OPTIONAL COPPER STRIKE
5. GOLD PL. 30 MIN. THICK OVER NICKEL PL. 100 MIN. THICK OVER OPTIONAL COPPER STRIKE
6. TEFLON MIL-P-19468 ; ASTM D-1710 OR EQUIVALENT
7. COPPER PER ASTM B-75 ALLOY C12200 OR EQUIVALENT
8. NYLON66(WITH 33% GLASS FIBER) PER NYTEX COMPOSITES CO., LTD. GRADE MG-0033N-V0 OR EQUIVALENT
9. BRASS PER QQ-B-613, ALLOY 260, H ; JIS H3100 C 2680R-H OR EQUIVALENT

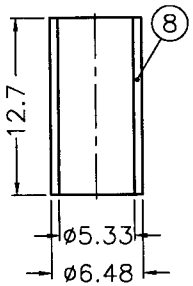

TABLE

KEY CODING	PART NO.	DRAWING NO.	ITEM NO.	LOCK COVER
A	FA1-NARJ-C04-0	FK6112AW-008-NT30G-50	FK6112AAA57NC5F	FKLC30501D
B	FA1-NBRJ-C04-0	FK6112BW-008-NT30G-50	FK6112AAB57NC5F	FKLC30502D
C	FA1-NCRJ-C04-0	FK6112CW-008-NT30G-50	FK6112AAC57NC5F	FKLC30503D
D	FA1-NDRJ-C04-0	FK6112DW-008-NT30G-50	FK6112AAD57NC5F	FKLC30504D
E	FA1-NERJ-C04-0	FK6112EW-008-NT30G-50	FK6112AAE57NC5F	FKLC30505D
F	FA1-NFRJ-C04-0	FK6112FW-008-NT30G-50	FK6112AAF57NC5F	FKLC30506D
G	FA1-NGRJ-C04-0	FK6112GW-008-NT30G-50	FK6112AAG57NC5F	FKLC30507D
H	FA1-NHRJ-C04-0	FK6112HW-008-NT30G-50	FK6112AAH57NC5F	FKLC30508D
I	FA1-NIRJ-C04-0	FK6112IW-008-NT30G-50	FK6112AAI57NC5F	FKLC30509D
K	FA1-NKRJ-C04-0	FK6112KW-008-NT30G-50	FK6112AAK57NC5F	FKLC30510D
Z	FA1-NZRJ-C04-0	FK6112ZW-008-NT30G-50	FK6112AAZ57NC5F	FKLC30511D

NO.	DESCRIPTION	MATERIAL	FINISH	Q'TY	DRAWING NO.
8	FERRULE	NOTE 7	NOTE 4	1	FKFR00201A
7	PLATE	NOTE 9	NOTE 4	1	FKPA00102A
6	LOCK COVER	NOTE 8		1	SEE TABLE
5	CONTACT PIN	NOTE 2	NOTE 5	1	FKCP00801A
4	INSULATOR	NOTE 6	NATURAL	1	FKNS01201A
3	RETAINER RING	NOTE 3	NATURAL	1	FKRR00101A
2	BODY	NOTE 1	NOTE 4	1	FKBD00601B
1	HOUSING	NOTE 1	NOTE 4	1	FKHS00301B

DIMENSIONS ARE IN MILLIMETERS

UNLESS OTHERWISE SPECIFIED TOLERANCES
0.5-6 = ±0.2
6-30 = ±0.4
30-120 = ±0.6
120-315 = ±1
315-1000 = ±1.6
1000-2000 = ±2.4

SCALE 2/1 | ISSUE F2

PART NO. FA1-NXRJ-C04-0

APPROVED MARK CHU DATE 05-15-03'

CHECKED COASE WANG DATE 05-15-03'

DRAWN LILY CHIU DATE 05-15-03'

FILE NO.F:\DWG\FK\6112XX\008\50\NT30G-F1-PPAP

Amphenol
Danbury,CT,USA-Tainan,Taiwan-Shenzhen,China

TITLE FAKRA R/A JACK (FOR RG-58B/U, 58C/U CABLE)

DRAWING NO. FK6112XX-008-NT30G-50

ITEM NO. FK6112AAX57NC5F