THIS DRAWING IS UNPUBLISHED. RELEASED FOR PUBLICATION -,- .
© COPYRIGHT - TE Connectivity Ltd. ALL RIGHTS RESERVED.

REVISIONS

P	LTR	DESCRIPTION	DATE	DWN	APVD
	E1	REVISED PER ECO-19-014709	25SEP2019	AP	GL

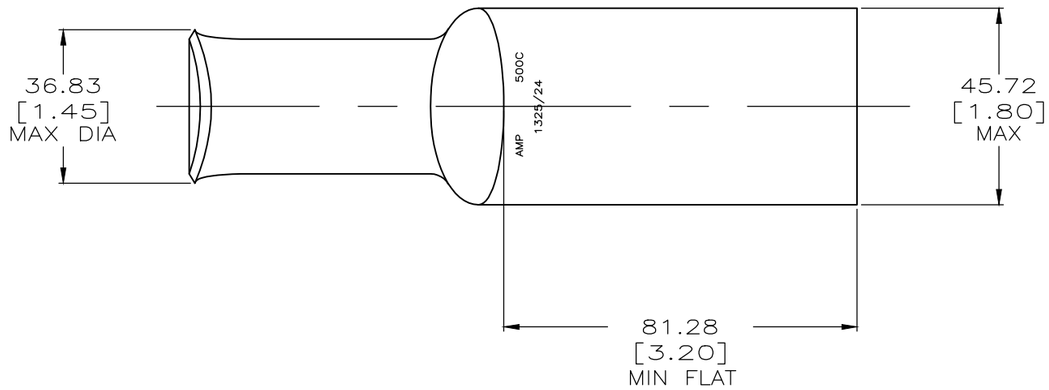

1 CIRCULAR MIL RANGE: 450-550 MCM

2 TIN PL 0.00381[.000150] MIN THK PER MIL-T-10727

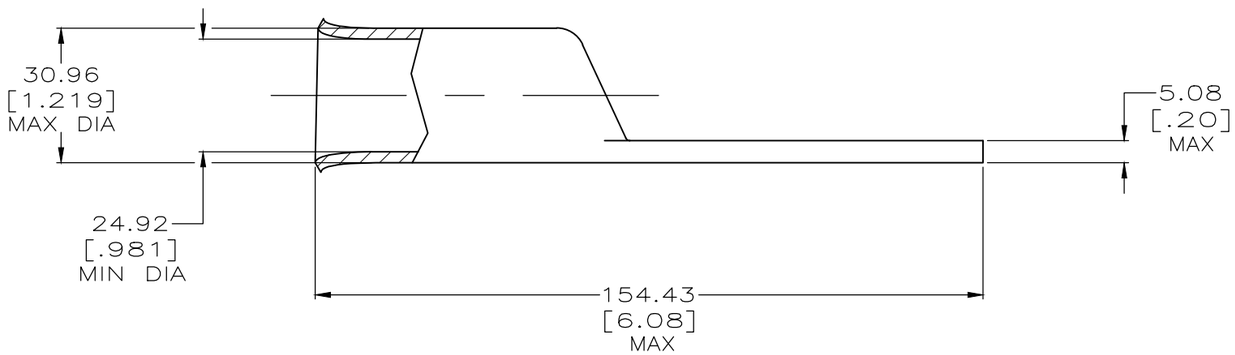

326123
PART NO

THIS DRAWING IS A CONTROLLED DOCUMENT.

DIMENSIONS: mm [INCHES]

TOLERANCES UNLESS OTHERWISE SPECIFIED:
0 PLC ± -
1 PLC ± -
2 PLC ± 0.51[.020]
3 PLC ± -
4 PLC ± -
ANGLES ± -

MATERIAL: ANNEALED COPPER ASTM B-75

FINISH: 2

DWN DK SCHRUM 02/28/90
CHK MS FEHER 24JAN95
APVD WJ VOCKROTH 24JAN95
PRODUCT SPEC 108-30200
APPLICATION SPEC —
WEIGHT .622 LB

TE Connectivity

NAME: TERMINAL, AMPOWER,™ WIRE SIZE: 500 MCM —

SIZE	CAGE CODE	DRAWING NO	RESTRICTED TO
A3	00779	C-326123	—

CUSTOMER DRAWING | SCALE NTS | SHEET 1 OF 1 | REV E1

METRIC

1470-19 (1/15)