PART NUMBER	"A"	"B"	"C"	"D"	LEAD "A" COLOR	LEAD "B" COLOR
FHAC0002ZXJ	89.5±5 (3.524)	89.5±5 (3.524)	6.35±2 (0.25)	6.35±2 (0.25)	ORANGE	ORANGE
FHAC0002ZXJA	243.5±5 (9.587)	243.5±5 (9.587)	N/A	N/A	RED	RED

LTR	DATE	REVISION	CHK	APD
A	06/20/07	63273-RELEASED DHM		
B	11/21/07	000218ER-RELEASE FHAC0002ZXJA DHM		

NOTES

1. HOLDER MATERIAL: BLACK TPV 251 80W232
2. CONTACTS: C194 COPPER ALLOY ANNEALED TIN-PLATED
3. WIRE: 12 AWG STRANDED COPPER, 125°C RATED, GXL WIRE
5. CRIMP: MUST MEET USCAR 21 STANDARD
6. MAX. RATING: 30A, 32Vdc
6. MAX. TEMPERATURE 105°C
7. FUSEHOLDER SHOULD NOT BE PLACED UNDER TENSION IN FINAL APPLICATION

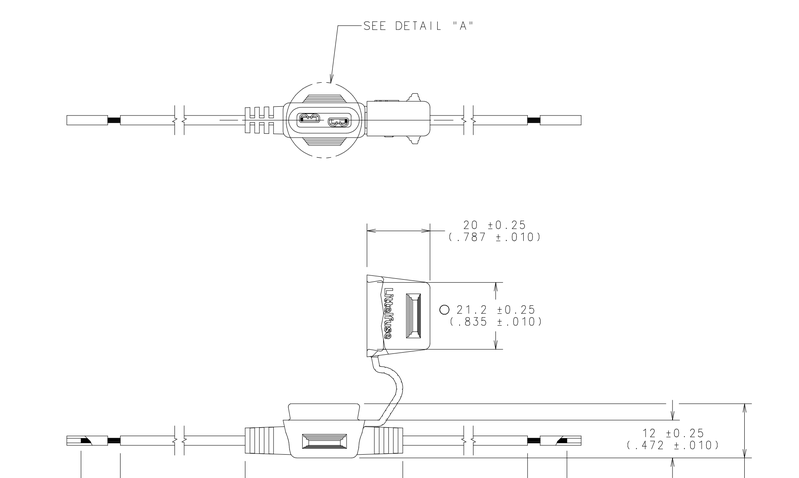

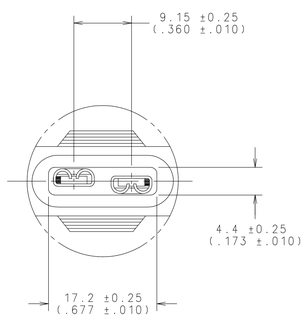

DETAIL "A"
SCALE 2:1

NO	COMPONENT NO	DESCRIPTION	QTY/M	U/M

BILL OF MATERIAL

UNLESS OTHERWISE SPECIFIED, DIMENSIONS ARE IN MILLIMETERS. DIMENSIONS IN BRACKETS [ ] ARE INCHES.

UNLESS OTHERWISE SPECIFIED, DIMENSIONS DO NOT INCLUDE PLATING.

○	DENOTES CRITICAL CHARACTERISTICS.
CPK	DENOTES CPK DIMENSIONS,-MINIMUM CPK VALUE
SI	DENOTES A CHARACTERISTIC THAT PROVIDES AN INDICATION OF PROCESS PERFORMANCE, PROCEDURE FOR MEASUREMENT AND TRACKING TO BE DEFINED IN LITTELFUSE INSPECTION INSTRUCTIONS.
CP	DENOTES CP DIMENSIONS,-MINIMUM CP VALUE MUST BE WITHIN THE DIMENSIONAL LIMITATIONS SHOWN ON DRAWING AND INITIALLY LOCATED TO ALLOW FOR MAXIMUM TOOL LIFE.

D

COPIES TO		
1	9	18
2	10	19
3	12	20
4	13	21
5	14	23
6	15	33
7	16	43
8	17	53

MAIL SPEC: SEE NOTES

FINISH:

DRW	DHM	DATE 06/20/07	SCALE FULL UNLESS NOTED
CHK		DATE	SUPER DR
APPD		DATE	FINISH GOOD WT GRAMS/PIECE

TOLERANCE UNLESS OTHERWISE SPECIFIED
TWO PLACE DEC ±.25[.01] FRACTION ±
THREE PLACE DEC ±.100[.004] ANGULAR ±1°

3RD ANGLE PROJECTION

TITLE
ATO IN-LINE FUSEHOLDER

Littelfuse®
DES PLAINES, ILLINOIS 60016

REVISION	DRWG. NO. OUTLINE SERIES
B	FHAC0002ZXJ

UNCONTROLLED DOCUMENT

CAD GENERATED DRAWING - NO PENCIL CHANGES ALLOWED