MAX2584A

Complete RF-to-Baseband Receiver

Highly Integrated, Ideal Solution for Low-Cost Phones in Asian and South American Markets

Status

All versions are No Longer Available.

Data Sheet

No Longer Available

Description

The MAX2584A highly integrated RF-to-baseband receiver supports cellular-band applications such as CDMA and OFDM. The MAX2584A includes an LNA, mixer, baseband filter, PLL, VGA, and an RF VCO. The entire receiver eliminates most of the external components found in other receivers including the IF SAW filter and VCO.

To optimize dynamic range at minimum current, the MAX2584A implements several programmable gain and linearity states, each optimized for minimum current while meeting sensitivity and linearity requirements for as many as four ranges of received signal strength.

The MAX2584A is available in a 7mm x 7mm leadless 48-pin flip-chip (fcLGA) package and is specified over the extended -40°C to +85°C temperature range.

Key Features

- No External IF SAW Filters Required
- RF VCO and PLL Included
- On-Chip Matching
- Optimized Low-Current Modes
- Two-Chip System Solution with the MAX2504A
- 3dB Typical Cascaded LNA-Referred Noise Figure
- Small 48-Pin fcLGA Leadless Package (7mm x 7mm)

Applications/Uses

- IS-2000 1xEV, EV-DO, and EV-DV
- IS-95 (CDMA)
- OFDM Systems

Diagram

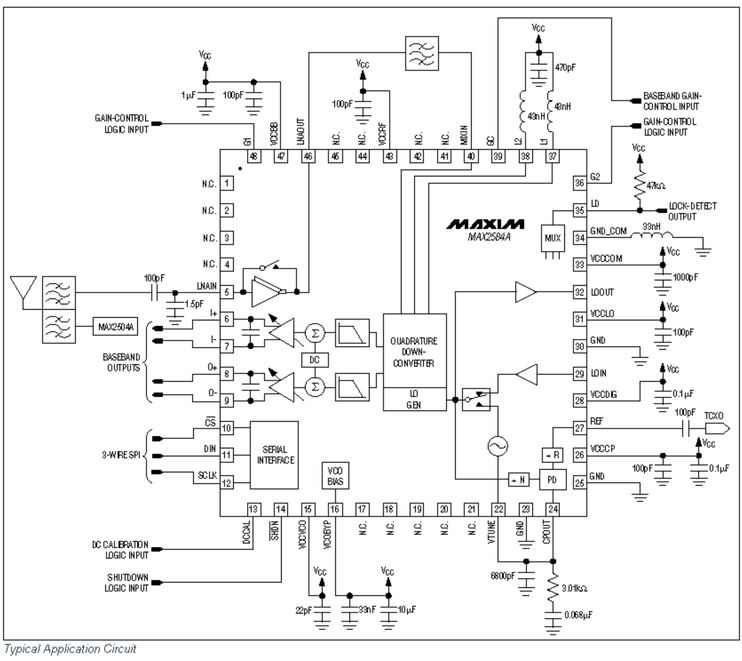

Typical Application Circuit

Reliability Reports

Show FIT data for: MAX2584A Go

Request Reliability Report for: MAX2584A Go

Software/Models

none

Ordering Information

Filters: Part Number: Package: Any Temperature: Any Tape and Reel Sample Go

Part Number	Free Sample	Buy	Status	Package: TYPE PINS FOOTPRINT DRAWING CODE/VAR *	Temp	RoHS/Lead-Free? Materials Analysis
MAX2584AELM		N/A	No Longer Available	FCLGA;48 pin;50.4 mm² Land Pattern: Not Available Use pkgcode/variation: L4877A-2*	-40°C to +85°C	RoHS/Lead-Free: RoHS Qualified Materials Analysis
MAX2584AELM-D		N/A	No Longer Available	LGA;48 pin Land Pattern: Not Available	-40°C to +85°C	See data sheet
MAX2584AELM-T		N/A	No Longer Available	FCLGA;48 pin;50.4 mm² Land Pattern: Not Available Use pkgcode/variation: L4877A-2*	-40°C to +85°C	RoHS/Lead-Free: RoHS Qualified Materials Analysis
MAX2584AELM-TD		N/A	No Longer Available	FCLGA;48 pin;50.4 mm² Land Pattern: Not Available Use pkgcode/variation: L4877A-2*	-40°C to +85°C	RoHS/Lead-Free: RoHS Qualified Materials Analysis

Notes:
1. Other options and links for purchasing parts are listed at: http://www.maxim-ic.com/sales.
2. Didn't Find What You Need? Ask our applications engineers. Expert assistance in finding parts, usually within one business day.
3. Part number suffixes: T or T&R = tape and reel; + = RoHS/lead-free; # = RoHS/lead-exempt; -D = drypack; -U/+U on DS parts = cut tape. More: See Full Data Sheet or Maxim Product Naming Conventions.
4. * Some packages have variations, listed on the drawing. "PkgCode/Variation" tells which variation the product uses. Note that "+", "#", "-" in the part number suffix describes RoHS status. Package drawings may show a different suffix character.

Similar Products by Function

MAX2500, MAX2502, MAX2503, ... Complete Cellular Baseband-to-RF Transmitters with PA

Didn't Find What You Need?

Next Day Product Selection Assistance from Applications Engineers
Parametric Search
Applications Help

Information Index

Overview
Description
Key Features
Applications/Uses
Key Specifications
Diagram
Notes and Comments

Technical Documents
Data Sheet
Technical Documents
Evaluation Kits
Reliability Reports
Software/Models

Ordering Info
Price and Availability
Samples
Buy Online
Package Information
Lead-Free Information

Related Products
Similar Products by Function
Similar Products by Application
Evaluation Kits
Products with Similar Part Numbers
Products Used With This

Document Ref.: 19-3839 Rev 1; 2006-01-26
This page last modified: 2006-08-03