NO. OF CKTS.	DIM. A	DIM. B	SLOTS LOC.
28	(71.12 / 70.61) 2.800 / 2.780	(68.58 ± 0.25) 2.700 ± .010	4 , 5 24 , 25
27	(68.58 / 68.07) 2.700 / 2.680	(66.04 ± 0.25) 2.600 ± .010	4 , 5 24 , 25
26	(66.04 / 65.53) 2.600 / 2.580	(63.50 ± 0.25) 2.500 ± .010	4 , 5 20 , 21
25	(63.50 / 62.99) 2.500 / 2.480	(60.96 ± 0.25) 2.400 ± .010	4 , 5 20 , 21
24	(60.96 / 60.45) 2.400 / 2.380	(58.42 ± 0.25) 2.300 ± .010	4 , 5 20 , 21
23	(58.42 / 57.96) 2.300 / 2.282	(55.88 ± 0.23) 2.200 ± .009	4 , 5 20 , 21
22	(55.88 / 55.42) 2.200 / 2.182	(53.34 ± 0.23) 2.100 ± .009	4 , 5 16 , 17
21	(53.34 / 52.88) 2.100 / 2.082	(50.80 ± 0.23) 2.000 ± .009	4 , 5 16 , 17
20	(50.80 / 50.34) 2.000 / 1.982	(48.26 ± 0.23) 1.900 ± .009	4 , 5 16 , 17
19	(48.26 / 47.80) 1.900 / 1.882	(45.72 ± 0.23) 1.800 ± .009	4 , 5 16 , 17
18	(45.72 / 45.31) 1.800 / 1.784	(43.18 ± 0.20) 1.700 ± .008	4 , 5 12 , 13
17	(43.18 / 42.77) 1.700 / 1.684	(40.64 ± 0.20) 1.600 ± .008	4 , 5 12 , 13
16	(40.64 / 40.23) 1.600 / 1.584	(38.10 ± 0.20) 1.500 ± .008	4 , 5 12 , 13
15	(38.10 / 37.69) 1.500 / 1.484	(35.56 ± 0.20) 1.400 ± .008	4 , 5 12 , 13
14	(35.56 / 35.20) 1.400 / 1.386	(33.02 ± 0.18) 1.300 ± .007	4 , 5 8 , 9
13	(33.02 / 32.66) 1.300 / 1.286	(30.48 ± 0.18) 1.200 ± .007	4 , 5 8 , 9
12	(30.48 / 30.12) 1.200 / 1.186	(27.94 ± 0.18) 1.100 ± .007	4 , 5 8 , 9
11	(27.94 / 27.58) 1.100 / 1.086	(25.40 ± 0.18) 1.000 ± .007	4 , 5 8 , 9
10	(25.40 / 25.04) 1.000 / .986	(22.86 ± 0.15) .900 ± .006	4 , 5
9	(22.86 / 22.50) .900 / .886	(20.32 ± 0.15) .800 ± .006	4 , 5
8	(20.32 / 19.96) .800 / .786	(17.78 ± 0.15) .700 ± .006	4 , 5
7	(17.78 / 17.42) .700 / .686	(15.24 ± 0.13) .600 ± .005	4 , 5
6	(15.24 / 14.88) .600 / .586	(12.70 ± 0.13) .500 ± .005	4 , 5
5	(12.70 / 12.40) .500 / .488	(10.16 ± 0.13) .400 ± .005	NONE
4	(10.16 / 9.86) .400 / .388	(7.62 ± 0.13) .300 ± .005	NONE
3	(7.62 / 7.32) .300 / .288	(5.08 ± 0.10) .200 ± .004	NONE
2	(5.08 / 4.78) .200 / .188	(2.54 ± 0.05) .100 ± .002	NONE

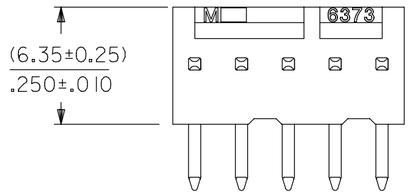

NOTES:

1. MATERIAL: NYLON, UL94V-0, COLOR: WHITE
2. FINISH:
   (154) = OVERALL TIN: (0.00254)/.000100 MIN., OVERALL NICKEL UNDERPLATE: (0.00127)/.000050 MIN.
   (197) = OVERALL REFLOWED MATTE TIN: 0.00152/.000060 MIN OVER 0.00127/.000050 MIN NICKEL.
   (222) = OVERALL MATTE TIN: (0.00254)/.000100 MIN., OVERALL NICKEL UNDERPLATE: (0.00127)/.000050 MIN.
   (208) = SELECT GOLD: 0.00038/.000015 MIN, SELECT MATTE TIN: 0.00254/.000100, BOTH OVER 0.00127/.000050 MIN NICKEL.
   (228) = SELECT GOLD: 0.00076/.000030 MIN, SELECT MATTE TIN: 0.00254/.000100, BOTH OVER 0.00127/.000050 MIN NICKEL.
   (241) = SELECT GOLD: 0.00051/.000020 MIN, SELECT MATTE TIN: 0.00254/.000100, BOTH OVER 0.00127/.000050 MIN NICKEL.
3. PARTS CONFORM TO PRODUCT SPECIFICATION PS-10-07.
4. PACKAGING INFORMATION: SEE LEGEND.
5. PARTS ARE STACKABLE END TO END ON (2.54)/.100 CENTERS.
6. PIN PUSH OUT FORCE: 2 LBS. MIN.
7. CIRCUIT ONE DESIGNATION IS USED TO DEFINE VOID LOCATION.
   CIRCUIT ONE MAY OR MAY NOT LINE UP WITH CIRCUIT ONE ON THE MATING HOUSING.
8. THIS PART CONFORMS TO CLASS B REQUIREMENTS OF COSMETIC SPECIFICATION PS-45499-002.

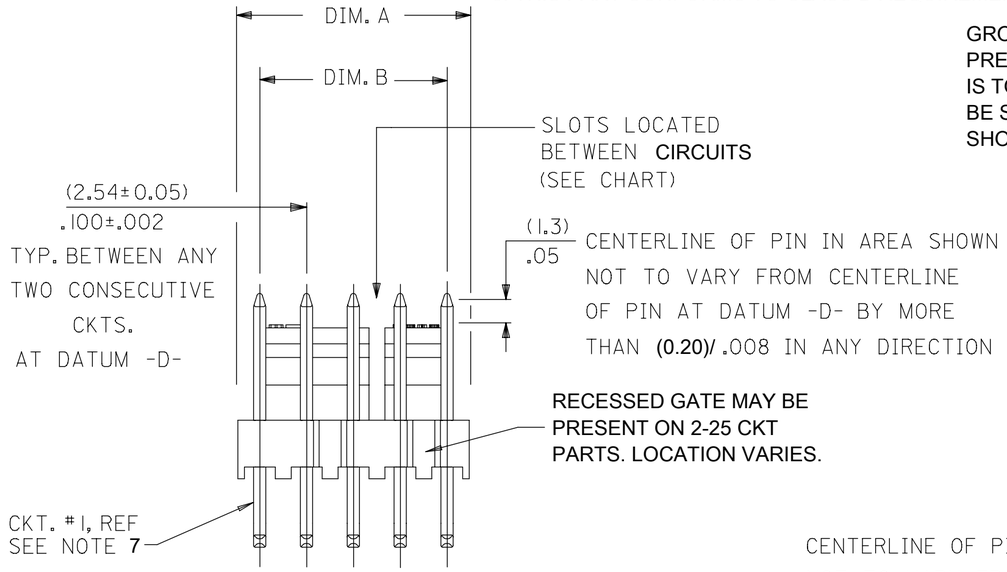

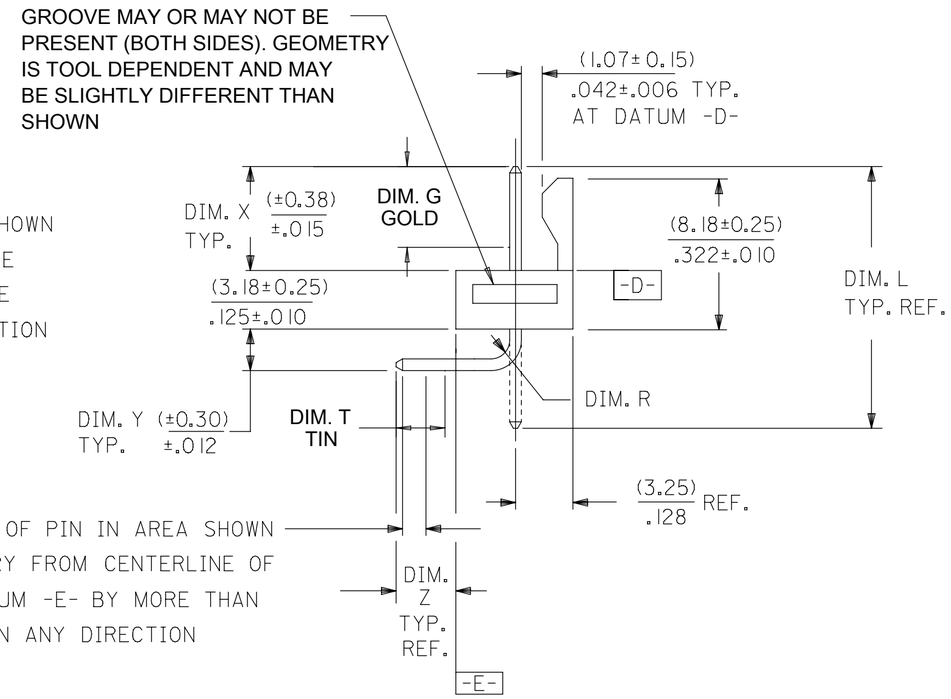

A-7478- N ✳ ✳ ✳

NO. OF CKTS.

VERSION LETTER CHANGES WHEN PIN NO. OR PRESS DIM. CHANGES

PLATING SEE NOTE 2

SECONDARY OPERATIONS	
CODE	PACKAGE
BLANK	BULK PK-7478-001
T	TUBE PER PK-44743-001

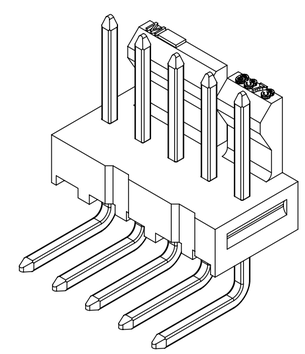

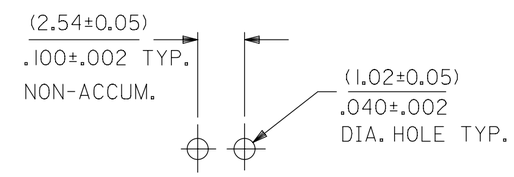

RECOMMENDED P.C. BOARD HOLE LAYOUT

RELEASE STATUS		RELEASE DATE	

QUALITY SYMBOLS: EA = 0; EC = 0; EP = 0; ▼ = 0; C = 0; ☒ = 0; ■ = 0; ▽ = 0

THIS DRAWING CONTAINS INFORMATION THAT IS PROPRIETARY TO MOLEX ELECTRONIC TECHNOLOGIES, LLC AND SHOULD NOT BE USED WITHOUT WRITTEN PERMISSION

ADD ALT ENGRAVING VIEW 2016/03/16
EC NO: 111298 2017/04/11
DRWN: MKIPPER CHK'D: MKIPPER APPR: FSMITH 2017/04/28

GENERAL TOLERANCES (UNLESS SPECIFIED)

	MM	INCH
4 PLACES	±	±
3 PLACES	±	± .010
2 PLACES	± 0.25	± .015
1 PLACES	± 0.38	±
0 PLACES	±	±

ANGULAR TOL ± 1/2

DRAFT WHERE APPLICABLE MUST REMAIN WITHIN DIMENSIONS

REV AA2

DIMENSION UNITS: MM/IN
SCALE: 4:1
DRWN BY: GUZIC DATE: 1987/07/30
CHK'D BY: PATEL DATE: 1987/07/30
APPR BY: FSMITH DATE: 2014/05/16
DRAWING SIZE: C
THIRD ANGLE PROJECTION

molex®

FRICTION LOCK HEADER ASY
.100 CL BENT SQ. PINS 7478 SERIES

PRODUCT CUSTOMER DRAWING

SERIES	MATERIAL NUMBER	CUSTOMER
7478	SEE CHART	GENERAL MARKET

DOCUMENT NUMBER	DOC TYPE	DOC PART	SHEET NUMBER
SDA-7478	PSD	000	1 OF 5

FORMAT: Eng-tega-master-tb-prod-C
REVISION: B
DATE: 2015/11/19

ENG. NO.	PIN NO.	DIM. L	DIM. X	DIM. Z	DIM. Y	DIM. W	DIM. R	DIM. G	DIM. T
A-7478-NA222	2766-41(222) OR 4266-0667	(18.80) / .740	(6.71) / .264	(3.58) / .141	(3.05) / .120	90°	(1.17) / .046	N/A	OVERALL
A-7478-NA241	4266-0666	(18.80) / .740	(6.71) / .264	(3.58) / .141	(3.05) / .120	90°	(1.17) / .046	(4.57) / .180	(3.43) / .135
A-7478-NA241T	4266-0666	(18.80) / .740	(6.71) / .264	(3.58) / .141	(3.05) / .120	90°	(1.17) / .046	(4.57) / .180	(3.43) / .135
A-7478-NA197T	4266-0662	(18.80) / .740	(6.71) / .264	(3.58) / .141	(3.05) / .120	90°	(1.17) / .046	N/A	OVERALL
A-7478-NA228	42663-0664	(18.80) / .740	(6.71) / .264	(3.58) / .141	(3.05) / .120	90°	(1.17) / .046	(4.57) / .180	(3.43) / .135
A-7478-NE197	42663-0742	(19.81) / .780	(7.75) / .305	(3.56) / .140	(3.05) / .120	90°	(1.17) / .046	N/A	OVERALL
A-7478-NF197	42663-0622	(18.29) / .720	(6.73) / .265	(2.92±.25) / .115±.010	(3.18) / .125 REF.	90°	(1.17) / .046	N/A	OVERALL
A-7478-NH197	42663-0482	(16.51) / .650	(7.49) / .295	(2.69) / .106	(0.64) / .025	90°	(.64) / .025	N/A	OVERALL
A-7478-NM208	42663-0564	(17.53) / .690	(7.57) / .298	(3.63) / .143	(0.64) / .025	90°	(.64) / .025	(5.08) / .200	(3.43) / .135
A-7478-NA154	42663-0668	(18.80) / .740	(6.71) / .264	(3.58) / .141	(3.05) / .120	90°	(1.17) / .046	N/A	OVERALL
A-7478-ANE197	42663-0742	(19.81) / .780	(7.75) / .305	(3.56) / .140	(3.05) / .120	90°	(1.17) / .046	N/A	OVERALL
A-7478-NM197	42663-0562	(17.53) / .690	(7.57) / .298	(3.63) / .143	(.64) / .025	90°	(.64) / .025	N/A	OVERALL
A-7478-NH228	42663-0483	(16.51) / .650	(7.49) / .295	(2.69) / .106	(.64) / .025	90°	(.64) / .025	(5.08) / .200	(5.08) / .200
A-7478-NN197	42663-0662	(18.80) / .740	(6.71) / .264	(3.58) / .141	(3.05) / .120	90°	(1.17) / .046	N/A	OVERALL
A-7478-NP197	42663-1142	(24.89) / .980	(6.60) / .260	(9.73) / .383	(3.05) / .120	90°	(1.17) / .046	N/A	OVERALL

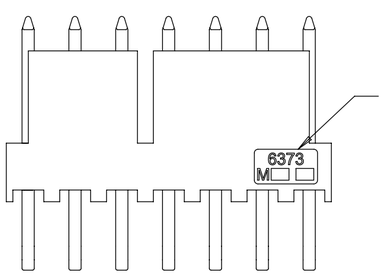

ALTERNATE ENGRAVING LOCATION (7-12 CKT PARTS ONLY). LOCATION IS DEPENDENT ON TOOLING.

THIS DRAWING CONTAINS INFORMATION THAT IS PROPRIETARY TO MOLEX ELECTRONIC TECHNOLOGIES, LLC AND SHOULD NOT BE USED WITHOUT WRITTEN PERMISSION

QUALITY SYMBOLS: FA = 0; FC = 0; FP = 0; ▼ = 0; C = 0; ☒ = 0; ■ = 0; ▽ = 0

SEE SHEET 1

EC NO: 111298 2016/03/16
DRWN: MKIPPER 2017/04/11
CHK'D: MKIPPER
APPR: FSMITH 2017/04/28

GENERAL TOLERANCES (UNLESS SPECIFIED)

	MM	INCH
4 PLACES	±	±
3 PLACES	±	± .010
2 PLACES	± 0.25	± .015
1 PLACES	± 0.38	±
0 PLACES	±	±

ANGULAR TOL ± 1/2

DRAFT WHERE APPLICABLE MUST REMAIN WITHIN DIMENSIONS

REV: AA2

DIMENSION UNITS: MM/IN
SCALE: NTS
DRWN BY: GUZIC DATE: 1987/07/30
CHK'D BY: PATEL DATE: 1987/07/30
APPR BY: FSMITH DATE: 2014/05/16
DRAWING SIZE: C
THIRD ANGLE PROJECTION

molex®

FRICTION LOCK HEADER ASY
.100 CL BENT SQ. PINS 7478 SERIES

PRODUCT CUSTOMER DRAWING

SERIES	MATERIAL NUMBER	CUSTOMER
7478	SEE CHART	GENERAL MARKET

DOCUMENT NUMBER	DOC TYPE	DOC PART	SHEET NUMBER
SDA-7478	PSD	000	2 OF 5

RELEASE STATUS	P1	RELEASE DATE	28.04.2017 22:16:23

FORMAT: Eng-tega-master-tb-prod-C
REVISION: B
DATE: 2015/11/19

A-7478-NA222		A-7478-NA241		A-7478-NA241T		A-7478-NA197T					
PART NO.	ENG. NO.	PART NO.	ENG. NO.	PART NO.	ENG. NO.	PART NO.	ENG. NO.	PART NO.	ENG. NO.	PART NO.	ENG. NO.
22-05-3021	A-7478-2A222	22-12-2024	A-7478-2A241	50-29-1710	A-7478-2A241T	50-34-8500	A-7478-2A197T				
22-05-3031	A-7478-3A222	22-12-2034	A-7478-3A241	50-29-1711	A-7478-3A241T	50-34-8501	A-7478-3A197T				
22-05-3041	A-7478-4A222	22-12-2044	A-7478-4A241	50-29-1705	A-7478-4A241T	50-34-8502	A-7478-4A197T				
22-05-3051	A-7478-5A222	22-12-2054	A-7478-5A241	50-29-1712	A-7478-5A241T						
22-05-3061	A-7478-6A222	22-12-2064	A-7478-6A241	50-29-1713	A-7478-6A241T						
22-05-3071	A-7478-7A222	22-12-2074	A-7478-7A241	50-29-1714	A-7478-7A241T						
22-05-3081	A-7478-8A222	22-12-2084	A-7478-8A241	50-29-1715	A-7478-8A241T						
22-05-3091	A-7478-9A222	22-12-2094	A-7478-9A241	50-29-1716	A-7478-9A241T						
22-05-3101	A-7478-10A222	22-12-2104	A-7478-10A241	50-29-1717	A-7478-10A241T						
22-05-3111	A-7478-11A222	22-12-2114	A-7478-11A241	50-29-1718	A-7478-11A241T						
22-05-3121	A-7478-12A222	22-12-2124	A-7478-12A241	50-29-1719	A-7478-12A241T						
22-05-3131	A-7478-13A222	22-12-2134	A-7478-13A241	50-29-1720	A-7478-13A241T						
22-05-3141	A-7478-14A222	22-12-2144	A-7478-14A241	50-29-1721	A-7478-14A241T						
22-05-3151	A-7478-15A222	22-12-2154	A-7478-15A241	50-29-1722	A-7478-15A241T						
22-05-3161	A-7478-16A222	22-12-2164	A-7478-16A241	50-29-1723	A-7478-16A241T						
22-05-3171	A-7478-17A222	22-12-2174	A-7478-17A241	50-29-1724	A-7478-17A241T						
22-05-3181	A-7478-18A222	22-12-2184	A-7478-18A241	50-29-1725	A-7478-18A241T						
22-05-3191	A-7478-19A222	22-12-2194	A-7478-19A241	50-29-1726	A-7478-19A241T						
22-05-3201	A-7478-20A222	22-12-2204	A-7478-20A241	50-29-1727	A-7478-20A241T						
22-05-3211	A-7478-21A222	22-12-2214	A-7478-21A241	50-29-1728	A-7478-21A241T						
22-05-3221	A-7478-22A222	22-12-2224	A-7478-22A241	50-29-1729	A-7478-22A241T						
22-05-3231	A-7478-23A222	22-12-2234	A-7478-23A241	50-29-1730	A-7478-23A241T						
22-05-3241	A-7478-24A222	22-12-2244	A-7478-24A241	50-29-1731	A-7478-24A241T						
22-05-3251	A-7478-25A222	22-12-2254	A-7478-25A241	50-29-1732	A-7478-25A241T						
22-05-3261	A-7478-26A222	22-12-2264	A-7478-26A241	50-29-1733	A-7478-26A241T						
22-05-3271	A-7478-27A222	22-12-2274	A-7478-27A241	50-29-1734	A-7478-27A241T						
22-05-3281	A-7478-28A222	22-12-2284	A-7478-28A241	50-29-1735	A-7478-28A241T						

THIS DRAWING CONTAINS INFORMATION THAT IS PROPRIETARY TO MOLEX ELECTRONIC TECHNOLOGIES, LLC AND SHOULD NOT BE USED WITHOUT WRITTEN PERMISSION

QUALITY SYMBOLS
FA = 0
FC = 0
FP = 0
▼ = 0
C = 0
☒ = 0
■ = 0
▽ = 0

SEE SHEET 1
EC NO: 111298 2016/03/16
DRWN: MKIPPER 2017/04/11
CHK'D: MKIPPER 2017/04/28
APPR: FSMITH
REV

GENERAL TOLERANCES (UNLESS SPECIFIED)

	MM	INCH
4 PLACES	±	±
3 PLACES	±	± .010
2 PLACES	± 0.25	± .015
1 PLACES	± 0.38	±
0 PLACES	±	±

ANGULAR TOL ± 1/2

DRAFT WHERE APPLICABLE MUST REMAIN WITHIN DIMENSIONS

AA2

DIMENSION UNITS: MM/IN
SCALE: NTS
DRWN BY: GUZIC DATE: 1987/07/30
CHK'D BY: PATEL DATE: 1987/07/30
APPR BY: FSMITH DATE: 2014/05/16
DRAWING SIZE: C
THIRD ANGLE PROJECTION

molex®

FRICTION LOCK HEADER ASY
.100 CL BENT SQ. PINS 7478 SERIES

PRODUCT CUSTOMER DRAWING

SERIES	MATERIAL NUMBER	CUSTOMER
7478	SEE CHART	GENERAL MARKET

DOCUMENT NUMBER	DOC TYPE	DOC PART	SHEET NUMBER
SDA-7478	PSD	000	3 OF 5

RELEASE STATUS	P1	RELEASE DATE	28.04.2017 22:16:23

FORMAT: Eng-lega-master-tb-prod-C
REVISION: B
DATE: 2010/11/19

A-7478-NA228

PART NO.	ENG. NO.
22-12-2026	A-7478-2A228
22-12-2036	A-7478-3A228
22-12-2046	A-7478-4A228
22-12-2056	A-7478-5A228
22-12-2066	A-7478-6A228
22-12-2076	A-7478-7A228
22-12-2086	A-7478-8A228
22-12-2096	A-7478-9A228
22-12-2106	A-7478-10A228
22-12-2116	A-7478-11A228
22-12-2126	A-7478-12A228
22-12-2136	A-7478-13A228
22-12-2146	A-7478-14A228
22-12-2156	A-7478-15A228
22-12-2166	A-7478-16A228
22-12-2176	A-7478-17A228
22-12-2186	A-7478-18A228
22-12-2196	A-7478-19A228
22-12-2206	A-7478-20A228
22-12-2216	A-7478-21A228
22-12-2226	A-7478-22A228
22-12-2236	A-7478-23A228
22-12-2246	A-7478-24A228
22-12-2256	A-7478-25A228
22-12-2266	A-7478-26A228
22-12-2276	A-7478-27A228
22-12-2286	A-7478-28A228

A-7478-NE197

PART NO.	ENG. NO.
22-05-8025	A-7478-2E197
	A-7478-3E197
	A-7478-4E197
22-05-8055	A-7478-5E197
	A-7478-6E197
	A-7478-7E197
	A-7478-8E197
	A-7478-9E197
	A-7478-10E197
	A-7478-11E197
	A-7478-12E197
	A-7478-13E197
	A-7478-14E197
	A-7478-15E197
	A-7478-16E197
	A-7478-17E197
	A-7478-18E197
	A-7478-19E197
	A-7478-20E197
	A-7478-21E197
	A-7478-22E197
	A-7478-23E197
	A-7478-24E197
	A-7478-25E197
	A-7478-26E197
	A-7478-27E197
	A-7478-28E197

A-7478-NF197

PART NO.	ENG. NO.
	A-7478-2F197
	A-7478-3F197
	A-7478-4F197
22-05-9058	A-7478-5F197
	A-7478-6F197
	A-7478-7F197
	A-7478-8F197
	A-7478-9F197
	A-7478-10F197
	A-7478-11F197
	A-7478-12F197
	A-7478-13F197
	A-7478-14F197
	A-7478-15F197
	A-7478-16F197
	A-7478-17F197
	A-7478-18F197
	A-7478-19F197
	A-7478-20F197
	A-7478-21F197
	A-7478-22F197
	A-7478-23F197
	A-7478-24F197
	A-7478-25F197
	A-7478-26F197
	A-7478-27F197
	A-7478-28F197

A-7478-NH197

	PART NO.	ENG. NO.
S	22-05-8020	A-7478-2H197
S	22-05-8030	A-7478-3H197
S	22-05-8040	A-7478-4H197
S	22-05-8050	A-7478-5H197
S	22-05-8060	A-7478-6H197
S	22-05-8070	A-7478-7H197
S	22-05-8080	A-7478-8H197
S	22-05-8090	A-7478-9H197
S	22-05-8100	A-7478-10H197
S	22-05-8110	A-7478-11H197
S	22-05-8120	A-7478-12H197
S	22-05-8130	A-7478-13H197
S	22-05-8140	A-7478-14H197
S	22-05-8150	A-7478-15H197
S	22-05-8160	A-7478-16H197
S	22-05-8170	A-7478-17H197
S	22-05-8180	A-7478-18H197
S	22-05-8190	A-7478-19H197
S	22-05-8200	A-7478-20H197
S	22-05-8210	A-7478-21H197
S	22-05-8220	A-7478-22H197
S	22-05-8230	A-7478-23H197
S	22-05-8240	A-7478-24H197
S	22-05-8250	A-7478-25H197
S	22-05-8260	A-7478-26H197
S	22-05-8270	A-7478-27H197
S	22-05-8280	A-7478-28H197

A-7478-NM208

	PART NO.	ENG. NO.
S		A-7478-2M208
S		A-7478-3M208
S		A-7478-4M208
S		A-7478-5M208
S		A-7478-6M208
S		A-7478-7M208
S		A-7478-8M208
S		A-7478-9M208
S		A-7478-10M208
S		A-7478-11M208
S	22-12-2123	A-7478-12M208
S		A-7478-13M208
S		A-7478-14M208
S		A-7478-15M208
S		A-7478-16M208
S		A-7478-17M208
S		A-7478-18M208
S		A-7478-19M208
S		A-7478-20M208
S		A-7478-21M208
S		A-7478-22M208
S		A-7478-23M208
S		A-7478-24M208
S		A-7478-25M208
S		A-7478-26M208
S		A-7478-27M208
S		A-7478-28M208

A-7478-NA154

PART NO.	ENG. NO.
50-30-4424	A-7478-2A154
50-30-4434	A-7478-3A154
50-30-4444	A-7478-4A154

RELEASE STATUS	P1	RELEASE DATE	28.04.2017 22:16:23

FORMAT: Eng-lega-master-tb-prod-C
REVISION: B
DATE: 2015/11/19

QUALITY SYMBOLS
FA = 0
FC = 0
FP = 0
▼ = 0
C = 0
☒ = 0
■ = 0
▽ = 0

THIS DRAWING CONTAINS INFORMATION THAT IS PROPRIETARY TO MOLEX ELECTRONIC TECHNOLOGIES, LLC AND SHOULD NOT BE USED WITHOUT WRITTEN PERMISSION

SEE SHEET 1
EC NO: 111298 2016/03/16
DRWN: MKIPPER 2017/04/11
CHK'D: MKIPPER 2017/04/28
APPR: FSMITH
REV
AA2

GENERAL TOLERANCES (UNLESS SPECIFIED)

	MM	INCH
4 PLACES	±	±
3 PLACES	±	± .010
2 PLACES	± 0.25	± .015
1 PLACES	± 0.38	±
0 PLACES	±	±

ANGULAR TOL ± 1/2

DRAFT WHERE APPLICABLE MUST REMAIN WITHIN DIMENSIONS

DIMENSION UNITS: MM/IN
SCALE: NTS
DRWN BY: GUZIC DATE: 1987/07/30
CHK'D BY: PATEL DATE: 1987/07/30
APPR BY: FSMITH DATE: 2014/05/16
DRAWING SIZE: C
THIRD ANGLE PROJECTION

molex®

FRICTION LOCK HEADER ASY
.100 CL BENT SQ. PINS 7478 SERIES

PRODUCT CUSTOMER DRAWING

SERIES	MATERIAL NUMBER	CUSTOMER
7478	SEE CHART	GENERAL MARKET

DOCUMENT NUMBER	DOC TYPE	DOC PART	SHEET NUMBER
SDA-7478	PSD	000	4 OF 5

A-7478-ANE197

PART NO.	ENG. NO.
	A-7478-A2E197
	A-7478-A3E197
	A-7478-A4E197
22-05-3055	A-7478-A5E197
	A-7478-A6E197
22-05-3075	A-7478-A7E197
	A-7478-A8E197
	A-7478-A9E197
	A-7478-A10E197
	A-7478-A11E197
	A-7478-A12E197
	A-7478-A13E197
	A-7478-A14E197
	A-7478-A15E197
	A-7478-A16E197
	A-7478-A17E197
	A-7478-A18E197
22-05-3195	A-7478-A19E197
	A-7478-A20E197
	A-7478-A21E197
	A-7478-A22E197
	A-7478-A23E197
	A-7478-A24E197
	A-7478-A25E197
	A-7478-A26E197
	A-7478-A27E197
	A-7478-A28E197

A-7478-NM197

PART NO.	ENG. NO.
22-12-4028	A-7478-2M197
22-12-4038	A-7478-3M197
22-12-4048	A-7478-4M197
22-12-4058	A-7478-5M197
22-12-4068	A-7478-6M197
22-12-4078	A-7478-7M197
22-12-4088	A-7478-8M197
22-12-4098	A-7478-9M197
22-12-4108	A-7478-10M197
22-12-4118	A-7478-11M197
22-12-4128	A-7478-12M197
22-12-4138	A-7478-13M197
22-12-4148	A-7478-14M197
22-12-4158	A-7478-15M197
22-12-4168	A-7478-16M197
22-12-4178	A-7478-17M197
22-12-4188	A-7478-18M197
22-12-4198	A-7478-19M197
22-12-4208	A-7478-20M197
22-12-4218	A-7478-21M197
22-12-4228	A-7478-22M197
22-12-4238	A-7478-23M197
22-12-4248	A-7478-24M197
22-12-4258	A-7478-25M197
22-12-4268	A-7478-26M197
22-12-4278	A-7478-27M197
22-12-4288	A-7478-28M197

A-7478-NH228

PART NO.	ENG. NO.
22-16-3026	A-7478-2H228
22-16-3036	A-7478-3H228
22-16-3046	A-7478-4H228
22-16-3056	A-7478-5H228
22-16-3066	A-7478-6H228
22-16-3076	A-7478-7H228
22-16-3086	A-7478-8H228
22-16-3096	A-7478-9H228
22-16-3106	A-7478-10H228
22-16-3116	A-7478-11H228
22-16-3126	A-7478-12H228
22-16-3136	A-7478-13H228
22-16-3146	A-7478-14H228
22-16-3156	A-7478-15H228
22-16-3166	A-7478-16H228
22-16-3176	A-7478-17H228
22-16-3186	A-7478-18H228
22-16-3196	A-7478-19H228
22-16-3206	A-7478-20H228
22-16-3216	A-7478-21H228
22-16-3226	A-7478-22H228
22-16-3236	A-7478-23H228
22-16-3246	A-7478-24H228
22-16-3256	A-7478-25H228
22-16-3266	A-7478-26H228
22-16-3276	A-7478-27H228
22-16-3286	A-7478-28H228

A-7478-NN197

PART NO.	ENG. NO.
	A-7478-2N197
	A-7478-3N197
	A-7478-4N197
	A-7478-5N197
	A-7478-6N197
	A-7478-7N197
	A-7478-8N197
	A-7478-9N197
	A-7478-10N197
	A-7478-11N197
	A-7478-12N197
	A-7478-13N197
	A-7478-14N197
	A-7478-15N197
	A-7478-16N197
22-59-5176	A-7478-17N197
	A-7478-18N197
	A-7478-19N197
	A-7478-20N197
	A-7478-21N197
	A-7478-22N197
	A-7478-23N197
	A-7478-24N197
	A-7478-25N197
	A-7478-26N197
	A-7478-27N197
	A-7478-28N197

A-7478-NP197

PART NO.	ENG. NO.
50-29-0033	A-7478-2P197
	A-7478-3P197
	A-7478-4P197
22-05-8053	A-7478-5P197
	A-7478-6P197
	A-7478-7P197
	A-7478-8P197
	A-7478-9P197
	A-7478-10P197
	A-7478-11P197
	A-7478-12P197
	A-7478-13P197
	A-7478-14P197
	A-7478-15P197
	A-7478-16P197
	A-7478-17P197
	A-7478-18P197
	A-7478-19P197
	A-7478-20P197
	A-7478-21P197
	A-7478-22P197
	A-7478-23P197
	A-7478-24P197
	A-7478-25P197
	A-7478-26P197
	A-7478-27P197
	A-7478-28P197

QUALITY SYMBOLS	
FA	= 0
FC	= 0
FP	= 0
▼	= 0
C	= 0
☒	= 0
■	= 0
▽	= 0

THIS DRAWING CONTAINS INFORMATION THAT IS PROPRIETARY TO MOLEX ELECTRONIC TECHNOLOGIES, LLC AND SHOULD NOT BE USED WITHOUT WRITTEN PERMISSION

SEE SHEET 1
EC NO: 111298 2016/03/16
DRWN: MKIPPER 2017/04/11
CHK'D: MKIPPER 2017/04/28
APPR: FSMITH
REV

GENERAL TOLERANCES (UNLESS SPECIFIED)

	MM	INCH
4 PLACES	±	±
3 PLACES	±	± .010
2 PLACES	± 0.25	± .015
1 PLACES	± 0.38	±
0 PLACES	±	±

ANGULAR TOL ± 1/2

DRAFT WHERE APPLICABLE MUST REMAIN WITHIN DIMENSIONS

AA2

DIMENSION UNITS: MM/IN
SCALE: NTS
DRWN BY: GUZIC DATE: 1987/07/30
CHK'D BY: PATEL DATE: 1987/07/30
APPR BY: FSMITH DATE: 2014/05/16
DRAWING SIZE: C
THIRD ANGLE PROJECTION

molex®

FRICTION LOCK HEADER ASY
.100 CL BENT SQ. PINS 7478 SERIES

PRODUCT CUSTOMER DRAWING

SERIES	MATERIAL NUMBER	CUSTOMER
7478	SEE CHART	GENERAL MARKET

DOCUMENT NUMBER	DOC TYPE	DOC PART	SHEET NUMBER
SDA-7478	PSD	000	5 OF 5

RELEASE STATUS: P1 | RELEASE DATE: 28.04.2017 22:16:23

FORMAT: Eng-lega-master-tb-prod-C
REVISION: B
DATE: 2010/11/19