THIS DRAWING IS UNPUBLISHED. RELEASED FOR PUBLICATION -,- .
© COPYRIGHT - BY TYCO ELECTRONICS CORPORATION. ALL RIGHTS RESERVED.

LOC	DIST
—	—

REVISIONS

P	LTR	DESCRIPTION	DATE	DWN	APVD
	C2	REVISED PER ECO-07-008164	15AUG07	JDP	CWR

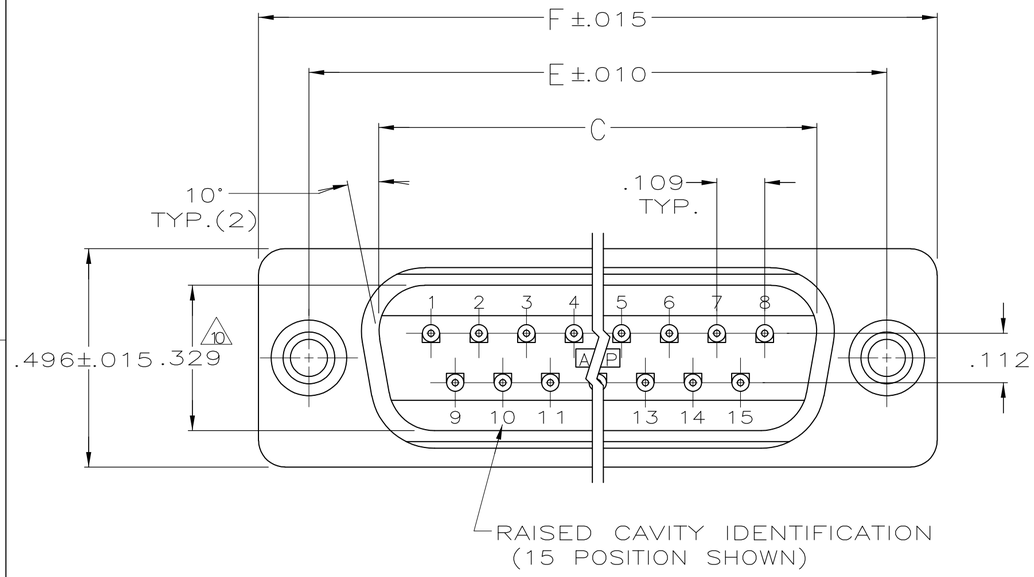

1. CONNECTORS COMPLY WITH AMP SPEC. 108-40,012 AND MATE WITH ANY SAME NUMBER POSITION PLUG CONNECTOR IN AMPLIMITE SERIES.
2. CONNECTOR DESIGNED FOR 28 AND 26 AWG STRANDED AND SOLID CONDUCTOR RIBBON CABLE ON .050℄.

3. DIMENSION APPLIES TO TERMINATED CONNECTOR.
4. INSERTS WILL WITHSTAND 6 IN. LBS. TORQUE AND 50 LBS. PULL OUT FORCE FROM MATING FACE SIDE.
5. MOLDED PARTS: FLAME RETARDANT 94V-O RATED THERMOPLASTIC; COLOR: BLACK.
6. CONTACTS: PHOS. BRONZE PER QQ-B-750.
7. INSERTS: BRASS PER MIL-C-50.
8. GOLD PLATING PER MIL-G-45204, BRIGHT TIN PLATING PER MIL-T-10727 (NOT TIN LEAD), NICKEL PLATING PER QQ-N-290.
9. CONTACTS: .000030 GOLD ON MATING END, .000100-.000200 BRIGHT TIN OR BRIGHT TIN LEAD ON TERMINATION END, ALL OVER .000050 NICKEL ON ENTIRE CONTACT.
10. DIMENSION APPLIES TO BASE OF SHROUD.
11. ADVANCED PART NUMBER, NOT PRODUCTION TOOLED.

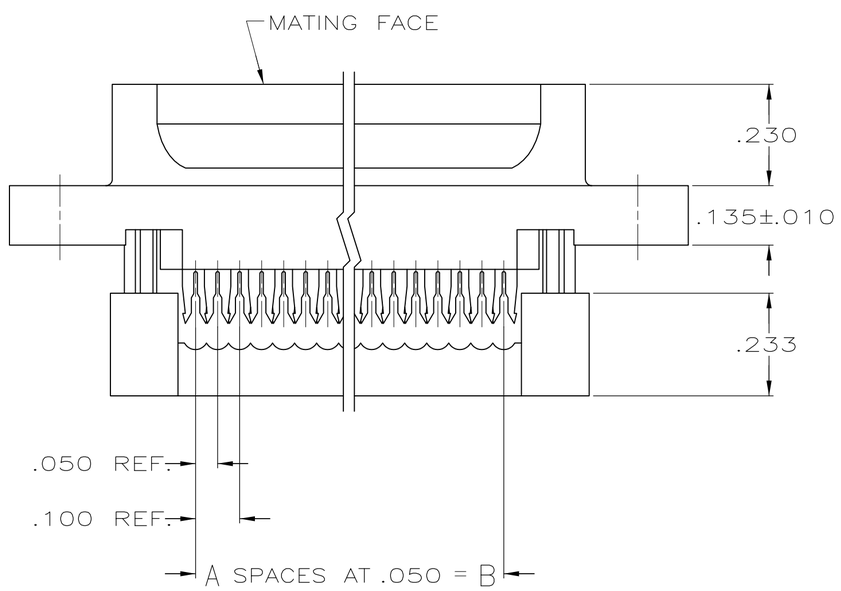

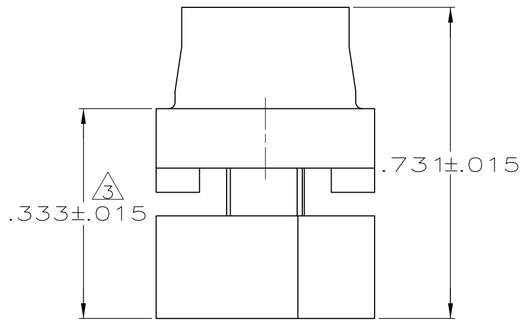

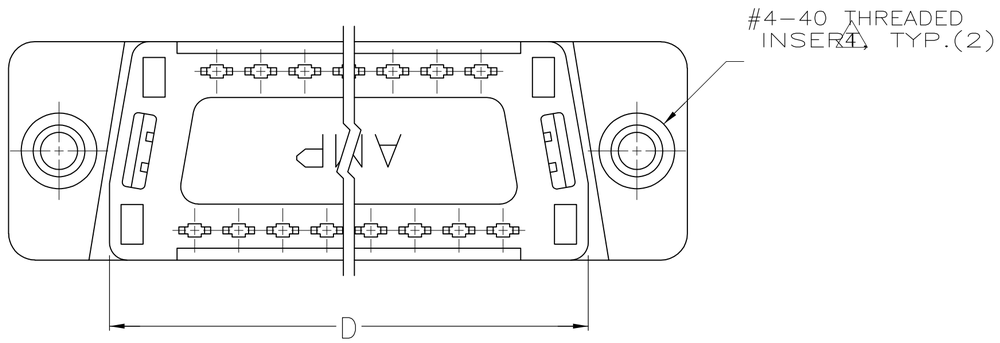

	F	E	D	C	B	A	NO.OF POS.	PART NUMBER
	1.764	1.526	1.287	1.140	.900	18	19	747053-5
OBSOLETE	1.216	.984	.759	.666	.400	8	9	747053-4
OBSOLETE	1.541	1.312	1.087	.994	.700	14	15	747053-3
OBSOLETE	2.090	1.852	1.623	1.534	1.200	24	25	747053-2
OBSOLETE	2.732	2.500	2.275	2.183	1.800	36	37	747053-1

THIS DRAWING IS A CONTROLLED DOCUMENT.

DIMENSIONS: INCHES

TOLERANCES UNLESS OTHERWISE SPECIFIED:
0 PLC ± -
1 PLC ± -
2 PLC ± -
3 PLC ± -
4 PLC ± -
ANGLES ± -

MATERIAL 5 6 7
FINISH 8 9

DWN J. GERACE 01NOV82
CHK J. GERACE 01NOV82
APVD R. LEGGETT 05NOV82
PRODUCT SPEC —
APPLICATION SPEC —
WEIGHT —

Tyco Electronics
Tyco Electronics Corporation
Harrisburg, PA 17105-3608

NAME
PLUG ASSEMBLY, LOW PROFILE HDF, WITH PRE-ASSEMBLED COVER AND THREADED INSERTS

SIZE	CAGE CODE	DRAWING NO	RESTRICTED TO
A2	00779	C-747053	—

CUSTOMER DRAWING | SCALE — | SHEET 1 OF 1 | REV C2

747053