LEAD FREE VERSION	PARTS NUMBER
7332E0225S15LF	7332E0225S15

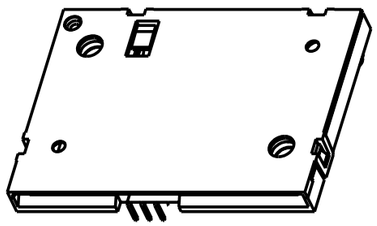

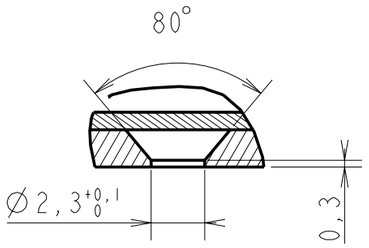

SECTION X-X
SCALE 4:1

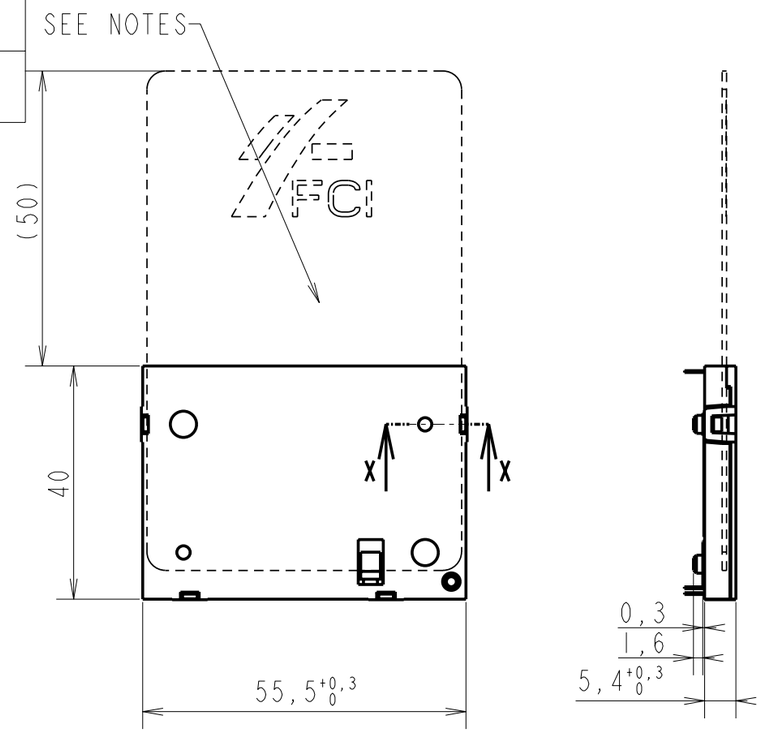

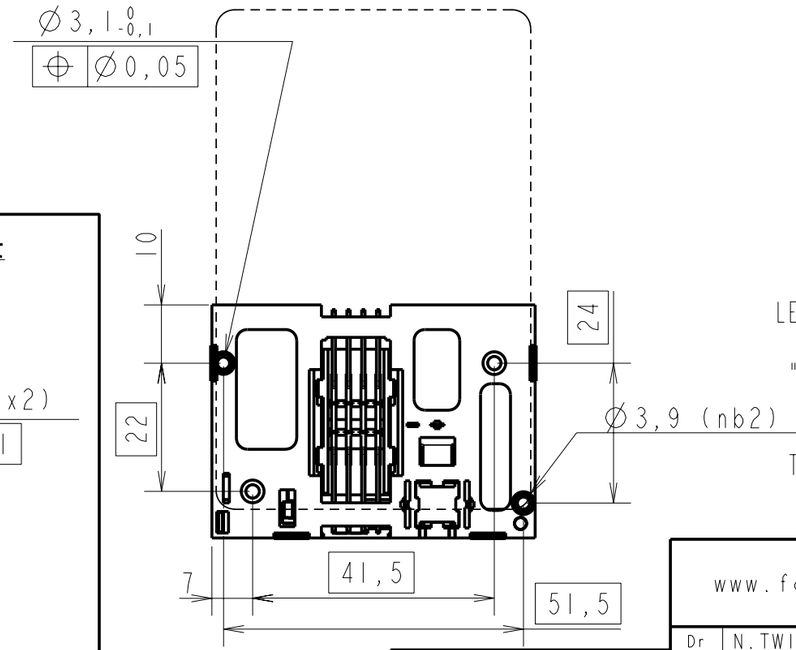

GENERAL :
High cycle life duration smart card connector with semi landing type contacts mechanism.
Smart card for reference purpose only.

ELECTRICAL PROPERTIES :
Insulation resistance : > 1000MΩ
Dielectric withstanding voltage : >750 Vrms
Curent carrying capacity : Min 10µA, Max 1A
Contact resistance : < 100mΩ

MECHANICAL PROPERTIES :
Operating force : Insertion : F < 10N
Withdrawal : 1 <F< 10N
Contact normal force : 0.2 <F<0.5N for 0.6mm of defletion
Durability :50 000 mating cycles

MATERIAL :
Head reader : Pa4/6, Colour Black, Rated UL94V0
Cover : Pa4/6, Colour Grey, Rated UL94V0
Contacts : Copper alloy
Plating : 2.5µm Nickel min. all over
2µm Gold min. on contact area
3µm SnPb(60/40) min. on solder tails
3µm matte tin min. on solder tails(for lead free version)

ENVIRONMENT :
Operating temperature : -20°C / +70°C
Storage temperature : -40°C / +85°C
Climatic condition : UTE 93-421

PACKAGING :
Cavity tray

LEAD FREE VERSION:

"This product meets European Union Directives and other country regulations as described in GS-22-008"

The housing will withstand exposure to 260°C peak temperature for 10seconds in a convection reflow oven.

Recommended PCB Layout
(Component side)

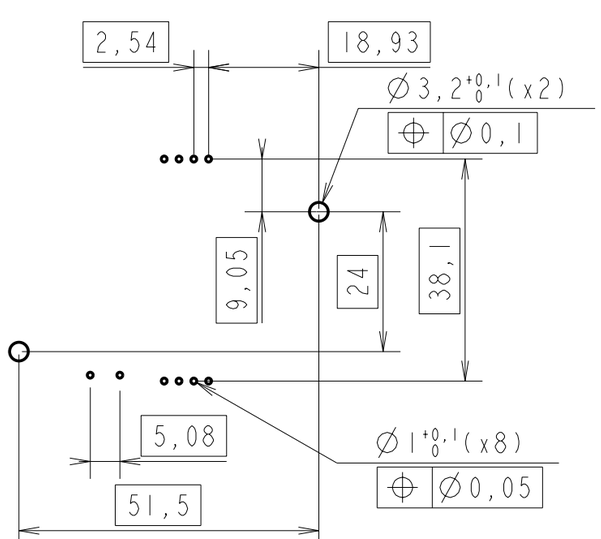

rev	ecn no	dr	date
1	-	JTA	2002/06/14
A	LS 3028	HLE	2003/03/19
B	105-0181	NT	2005/12/25
C	106-0192	SSC	2006/10/27
-	-	-	-
-	-	-	-
-	-	-	-

General Tolerances
0 to 10mm: ±0.1mm
10 to 30mm: ±0.15mm
30 to 60mm: ±0.2mm
60 dnd more: ±0.3mm

www.fciconnect.com

surface -- ISO 1302 ✓ | tolerance std ISO 406 ISO 1101 | projection | mm

TOLERANCES UNLESS OTHERWISE SPECIFIED

Dr	N.TWINCY	2005/12/25	ANGULAR 0° ±°	LINEAR	0.X ±	size A3
Eng	N.TWINCY	2005/12/25			0.XX ±	Scale 1:1
Chr	DILIPTHOMAS	2006/10/27			0.XXX ±	ECN 106-0192
Appr	K.V.SIVADAS	2006/10/27	Product family		MOBILE I/O	Spec ref --

title: E02 CARD READER
PROTECTED SLIDING

dwg no: C01MSB26ECE02 | Rev. C

catalog no: SEE TABLE | CUSTOMER | sheet 1 of 1

Copyright FCI.

REV F - 2006-04-17