THIS DRAWING IS UNPUBLISHED. RELEASED FOR PUBLICATION ,19 .
© COPYRIGHT 19 BY AMP INCORPORATED. ALL RIGHTS RESERVED.

LOC	DIST
AA	22

REVISIONS

P	LTR	DESCRIPTION	DATE	DWN	APVD
	J	SUPERSEDED: -3; EC 0G7A-0046-99	03FEB00	DLD	CMB

1. MATERIAL: HOUSING - PBT POLYESTER, BLACK. TERMINAL - 0.36 [.014] THICK PHOS BRONZE PLATED WITH 1.27µm [.000050] THICK HARD GOLD IN LOCALIZED GOLD PLATE AREA & 3.81µm [.000150] THICK TIN-LEAD IN SOLDER AREA OVER 1.27µm[.000050] THICK NICKEL UNDERPLATE.

2. CAVITY CONFORMS TO FCC RULES AND REGULATIONS PART 68 AND REA BULLETIN 345-81, PE-76 SPECIFICATIONS FOR MODULAR TELEPHONE HARDWARE.

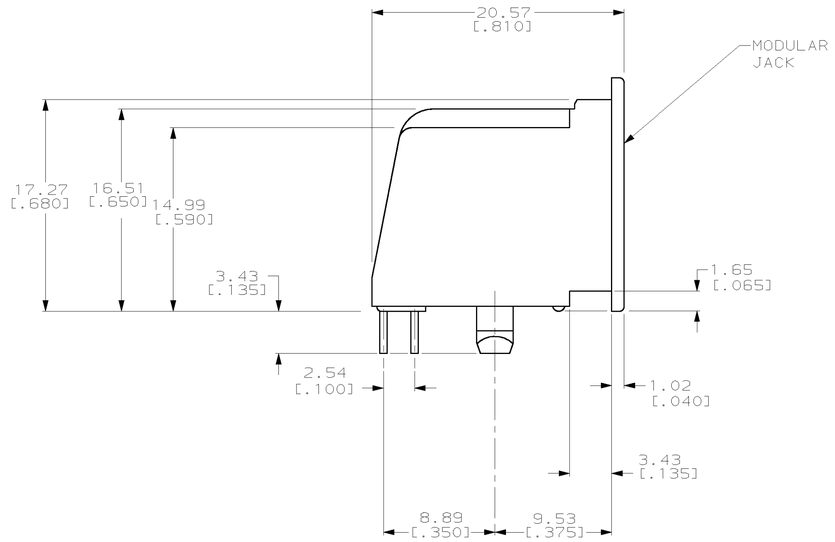

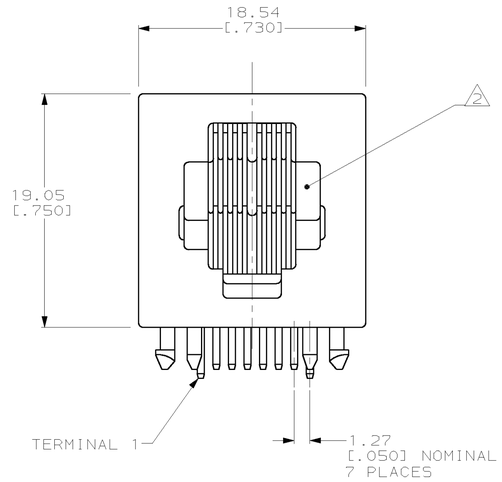

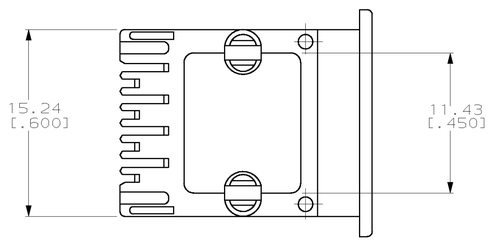

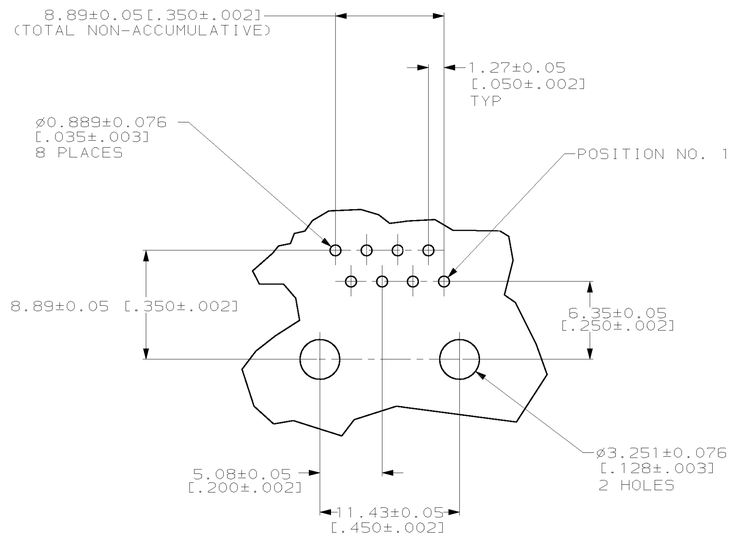

PRINTED CIRCUIT BOARD LAYOUT
VIEW SHOWN FROM CIRCUIT SIDE

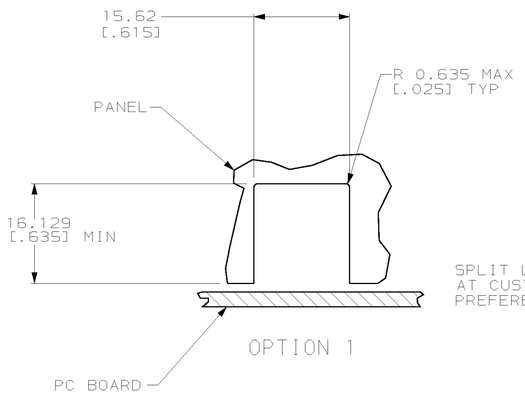

OPTION 1

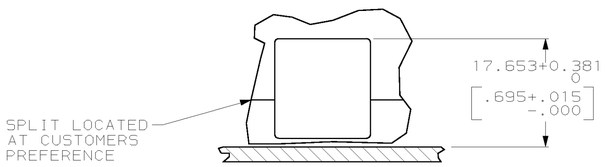

OPTION 2

PANEL CUTOUT
SCALE 2:1

	8	520243-4
	6	520243-3
SUPERSEDED BY 520243-4	CONTACTS	PART NUMBER

THIS DRAWING IS A CONTROLLED DOCUMENT.

DIMENSIONS: mm [INCHES]

TOLERANCES UNLESS OTHERWISE SPECIFIED:
0 PLC ±-
1 PLC ±-
2 PLC ±-
3 PLC ±0.13[.005]
4 PLC ±-
ANGLES ±-

MATERIAL 1

FINISH 1

DWN L. MUSTAR/UTA 30 MAY 95
CHK N. JONES 02 JUN 95
APVD E. LAURER 09 JUN 95

PRODUCT SPEC 108-1163
APPLICATION SPEC 114-2048
WEIGHT -

AMP Incorporated
Harrisburg, PA 17105-3608

NAME PRINTED CIRCUIT BOARD
MODULAR JACK ASSEMBLY, SIDE ENTRY,
8 POSITION, FLANGED

SIZE	CAGE CODE	DRAWING NO	RESTRICTED TO
A1	00779	C-520243	-

CUSTOMER DRAWING | SCALE 4:1 | SHEET 1 OF 1 | REV J