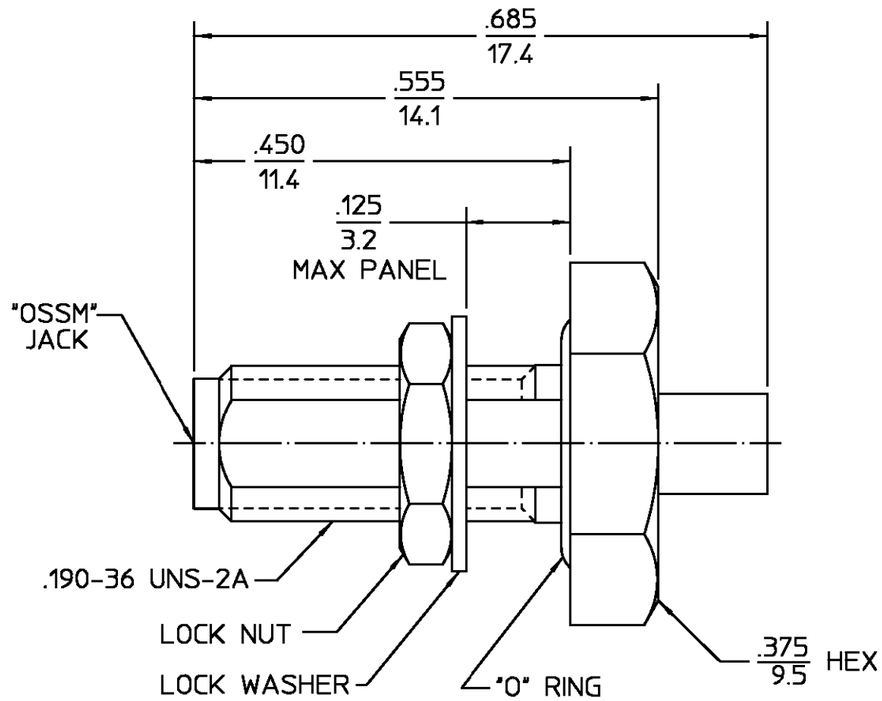

DESIGNED FOR USE WITH 0.085 SR	
CABLE ENTRY DIAMETER MINIMUM	
HOUSING	.089
CONTACT	.021

REVISIONS

REV	DESCRIPTION	DATE	APPROVED
02_2	REDRAWN IN CAD PER ECN 98-0001	PATLAN 5-18-98	6/24/1998

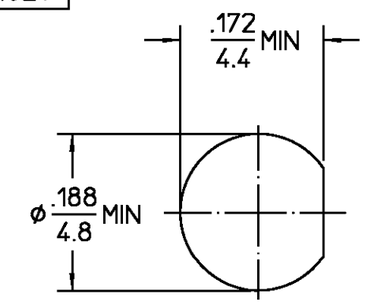

RECOMMENDED MOUNTING HOLE

ELECTRICAL	MECHANICAL	ENVIRONMENTAL
Nominal Impedance (Ohms) 50	Interface Dimensions MIL-STD-348A,	Temperature Rating -65° to +105°C
Frequency Range (GHz) DC to 26.0	Fig. 319-2	Vibration MIL-STD-202, Method
Volt Rating (VRMS MAX)	Recommended Mating	204, Condition D
@ Sea Level 250	Torque 7-10 in lbs	Shock MIL-STD-202, Method 213,
VSWR 1.07 + 0.01 f(GHz)	Mating Characteristics:	Condition I
Insertion Loss (dB MAX) $.04\sqrt{f(GHz)}$	Insertion (MAX Lbs) 2.0	Thermal Shock MIL-STD-202,
RF Leakage (dB MIN) -(100-fGHz)	Withdrawal (MIN Oz) 1.0	Method 107, Condition C,
Corona, 70,000 Ft (VRMS MIN) 190	Force to Engage and	Except High Temp +200°
Dielectric Withstanding Voltage	Disengage (In-Lbs MAX) 2	Moisture Resistance MIL-STD-202,
(VRMS MIN) @ Sea Level 750	Center Contact Captivation	Method 106
Contact Resistance (Milliohms MAX)	Axial (Lbs) N/A	Corrosion - MIL-STD-202, Method
Center Contact 2	Radial (In-Oz) N/A	101, Condition B, 5% salt spray
Outer Contact 2	Cable Retention	
Cable to Housing 0.5	Axial Force (Lbs) 30	
RF High Potential @ Sea Level	Torque (In-Oz) 16	.XXX = in
(VRMS MIN @ 5 MHz) 500	Weight (Grams) T.B.D.	XX.X = mm (REF)
I.R.(Megohms MIN) 10,000		

COMPONENT	MATERIAL	FINISH
HOUSING MOUNTING NUT LOCKWASHER	STAINLESS STEEL PER ASTM-A484 AND ASTM-A582, TYPE 303	GOLD PLATE PER MIL-G-45204
DIELECTRIC	PTFE FLUOROCARBON PER ASTM-D-1457	N/A
CENTER CONTACT	BERYLLIUM COPPER PER ASTM-B-196 OR ASTM-B-197, ALLOY C17300, CONDITION H	GOLD PLATE PER MIL-G-45204
O-RING	SILICONE RUBBER PER ZZ-R-765	N/A

UNLESS OTHERWISE SPECIFIED DIMENSIONS ARE IN INCHES

FRAC. ± 1/64 DEC. ±.005 ANGLES ± 1°

These drawings and specifications are the property of M/A COM Interconnect Div. and shall not be reproduced or copied or used in whole or in part as the basis for the manufacture or sale of item(s) without written permission.

		DATE
DRAWN BY	BW	7-9-68
CHECKED BY	PRB	7-9-68
APP'D BY	BE	9-11-68

USE ASS'Y PROCEDURE

NO. A.P. 10-006

(408-04793)

AMP Incorporated
140 Fourth Avenue
Waltham, MA 02451-7599

TITLE STRAIGHT BULKHEAD CABLE JACK

SIZE	CODE IDENT NO.		REV
B	26805	1004-7985-00	02_2
SCALE 6:1			SHEET 1 OF 1

CUSTOMER DRAWING

AMP PART # 1045401-1
SHEET 1 OF 1 REV A