THIS COPY IS PROVIDED ON A RESTRICTED BASIS AND IS NOT TO BE USED IN ANY WAY DETRIMENTAL TO THE INTERESTS OF PANDUIT CORP.

NO WARRANTY, EXPRESSED OR IMPLIED, IS MADE BY PANDUIT WITH RESPECT TO ADHESIVE BOND PERFORMANCE. AMONG OTHER THINGS, THE CONDITIONS UNDER WHICH THESE MOUNTS MAY BE APPLIED AND/OR THE SURFACE TO WHICH THEY MAY BE APPLIED ARE BEYOND PANDUIT'S CONTROL.

PANDUIT PART NO.	WEIGHT
NK2BX**-A	.76 LB/10 PCS (345.0 g/10 PCS)

NOTES:
1. SEE CURRENT CATALOG FOR ADDITIONAL PART NUMBER SUFFIXES TO INDICATE COLOR AND/OR PACKAGE QUANTITY.
2. BOX ACCEPTS 2 NETKEY™ MODULES.
3. THIS PRODUCT CAN BE USED WITH PANDUIT TYPE LDS, LDP, AND LD RACEWAYS.
4. DIMENSIONS IN PARANTHESIS ARE IN METRIC.
5. PART INCLUDES:
   - 1- BOX COVER
   - 1- BOX BASE
   - 2- MOUNTING SCREW
   - 1- CABLE TIE
   - 1- FOAM TAPE

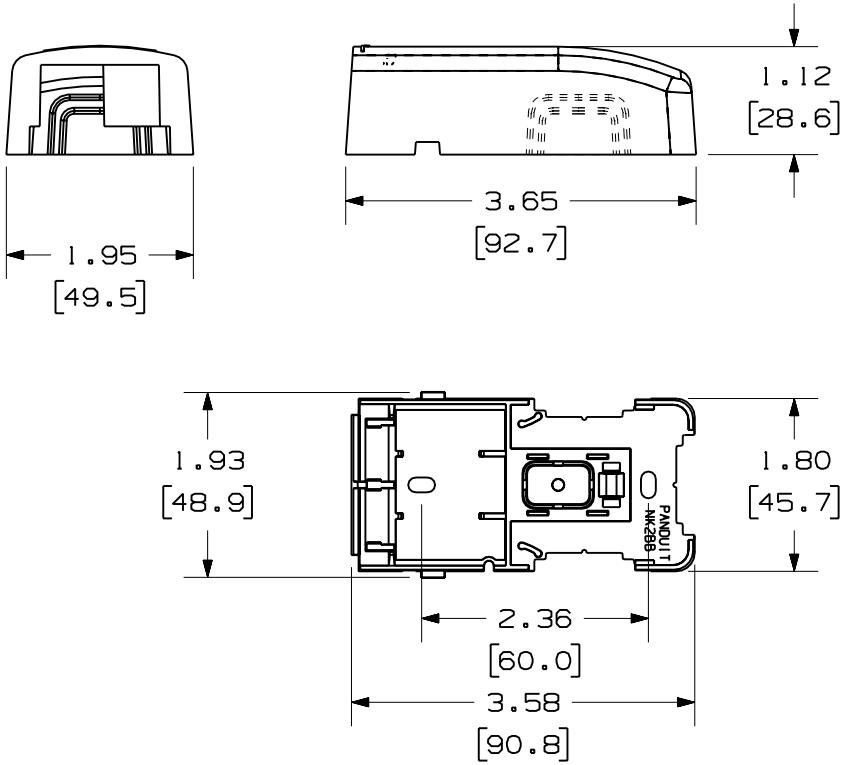

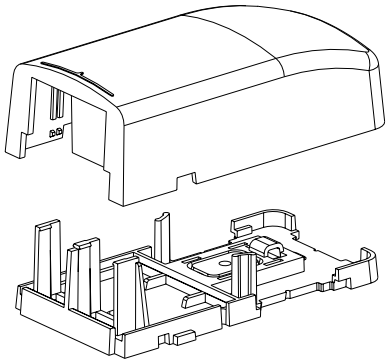

REV	DATE	BY	CHK	DESCRIPTION	ECN - R	CUST	SUP	OTH
R	11-10-05	JsP		RELEASED TO PRODUCTION	00661-01			

DRAWING FILENAME: M00661AC_DC_00A.PRT

SIZE: A

NETKEY™ 2 POSITION SURFACE MOUNT BOX CUSTOMER DRAWING

PANDUIT® CORP.
TINLEY PARK, IL 60477

THIRD ANGLE PROJECTION

ALL DIMENSIONS ARE GIVEN IN INCHES, UNLESS OTHERWISE SPECIFIED.

DIMENSIONAL TOLERANCES ARE:
(.X) ±.03 (.XXX) ±.005
(.XX) ±.01 ANGLES ± 1°

DRAWN BY: JsP
DATE: 11-10-05
CHK'D:

MATERIAL: ABS

I.I. NUMBER: N/A
PRODUCT SPEC: N/A
WORK INSTRUCTION: N/A
SCALE: NONE
PART NO.: NK2BX**-A
DRAWING NO.: 00661-01