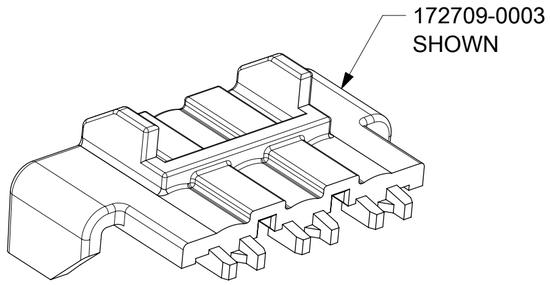


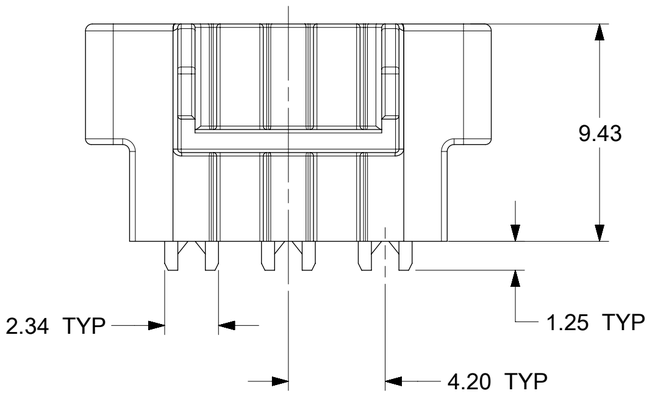


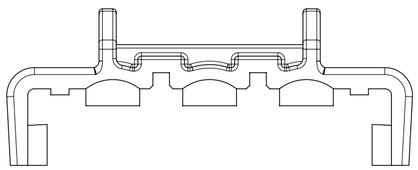

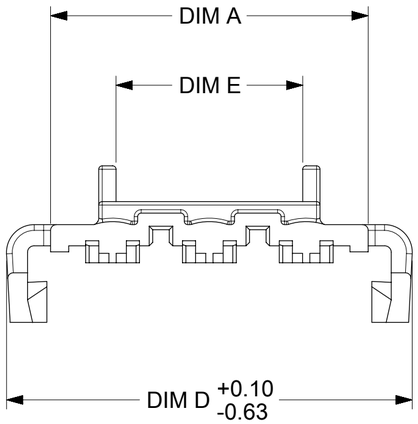


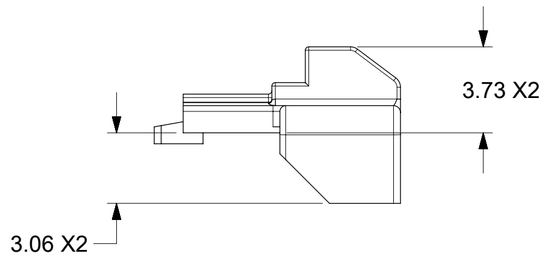


| PART NUMBER | CKTS | MATERIAL | DIM A | DIM D | DIM E |
|---|---|---|---|---|---|
| 172709-0001 | 1 | A | 7.98 | 11.80 | 5.34 |
| 172709-0002 | 2 | A | 9.58 | 13.40 | 6.90 |
| 172709-0003 | 3 | A | 13.78 | 17.60 | 8.10 |
| 172709-0004 | 4 | A | 17.98 | 21.80 | 8.10 |
| 172709-0005 | 5 | A | 22.18 | 26.00 | 8.10 |
| 172709-0006 | 6 | A | 26.38 | 30.20 | 8.10 |
| 172709-0101 | 1 | B | 7.98 | 11.80 | 5.34 |
| 172709-0102 | 2 | B | 9.58 | 13.40 | 6.90 |
| 172709-0103 | 3 | B | 13.78 | 17.60 | 8.10 |
| 172709-0104 | 4 | B | 17.98 | 21.80 | 8.10 |
| 172709-0105 | 5 | B | 22.18 | 26.00 | 8.10 |
| 172709-0106 | 6 | B | 26.38 | 30.20 | 8.10 |
| 1727090007 | 7 | A | 30.58 | 34.40 | 8.10 |
| 1727090008 | 8 | A | 34.78 | 38.60 | 8.10 |
| 1727090009 | 9 | A | 38.98 | 42.80 | 8.10 |
| 1727090010 | 10 | A | 43.18 | 47.00 | 8.10 |
| 1727090011 | 11 | A | 47.38 | 51.20 | 8.10 |
| 1727090012 | 12 | A | 51.58 | 55.40 | 8.10 |
| 1727090107 | 7 | B | 30.58 | 34.40 | 8.10 |
| 1727090108 | 8 | B | 34.78 | 38.60 | 8.10 |
| 1727090109 | 9 | B | 38.98 | 42.80 | 8.10 |
| 1727090110 | 10 | B | 43.18 | 47.00 | 8.10 |
| 1727090111 | 11 | B | 47.38 | 51.20 | 8.10 |
| 1727090112 | 12 | B | 51.58 | 55.40 | 8.10 |

NOTES:

1. MATERIAL:
   'A' = NYLON V-0, LOW HALOGEN, COLOR: NATURAL (WHITE)
   'B' = NYLON V-2, GLOW WIRE CAPABLE, COLOR: NATURAL (WHITE)
2. FINISH: NONE
3. PRODUCT SPECIFICATION: PS-172718-0000
   APPLICATION SPECIFICATION: AS-172718-0000
4. PACKAGING SPECIFICATION:
   PK-172709-0000
   PK-5557-003
   REFER TO AS-45499-001 FOR MOISTURIZING NYLON CONNECTOR PARTS.
5. THIS TPA TO BE USED WITH MOLEX FRONT HOUSING SERIES 172708, 172762, 172767, 200453, 200471 & 200488.
6. DIMENSIONS GIVEN ACROSS CENTERLINES ARE TO BE SYMMETRICAL ABOUT THOSE CENTERLINES WITHIN HALF THE TOTAL TOLERANCE.
7. THIS PART CONFORMS TO CLASS 'B' REQUIREMENTS OF COSMETIC SPECIFICATION PS-45499-002.

| RELEASE STATUS | P1 | RELEASE DATE | 20.02.2017 22:13:27 |
|---|---|---|---|

THIS DRAWING CONTAINS INFORMATION THAT IS PROPRIETARY TO MOLEX ELECTRONIC TECHNOLOGIES, LLC AND SHOULD NOT BE USED WITHOUT WRITTEN PERMISSION

CORR NOTE 1, ADD P/N 2016/11/29
EC NO: 113658
DRWN: SNAGARAVENKA
CHK'D: 2017/02/20
APPR: RHODGE
REV: C

GENERAL TOLERANCES (UNLESS SPECIFIED)
ANGULAR TOL ± °
4 PLACES ±
3 PLACES ±
2 PLACES ± 0.13
1 PLACE ± 0.2
0 PLACES ±
DRAFT WHERE APPLICABLE MUST REMAIN WITHIN DIMENSIONS

DIMENSION UNITS: MM
SCALE: 5:1
DRWN BY: TGREGORI DATE: 2014/09/10
CHK'D BY: TGREGORI DATE: 2016/07/27
APPR BY: RHODGE DATE: 2014/12/04
DRAWING SIZE: C
THIRD ANGLE PROJECTION

molex®

TPA
MINI-FIT TPA2

PRODUCT CUSTOMER DRAWING

| SERIES | MATERIAL NUMBER | CUSTOMER |
|---|---|---|
| 172709 | SEE TABLE | GENERAL MARKET |

| DOCUMENT NUMBER | DOC TYPE | DOC PART | SHEET NUMBER |
|---|---|---|---|
| SD-172709-0000 | PSD | 000 | 1 OF 1 |

FORMAT: master-tb-prod-C
REVISION: G
DATE: 2015/12/14