受控 CONTROLLED DOCUMENT					
编号 P/N	CP1094AST-CUST	版本 Rev	01	日期 Rel'd Date	Apr29,09

DRAWING NO.
CP1094AST - CUST

REVISIONS

01	OFFICIAL RELEASE				
	03-20-09	TW	BY	T	Thomas Chow

Description:	Front Mount Bulkhead Jack receptacle with Solder TAB
Part No:	CP1094AST
Application:	PCB
Crimp Tool:	N/A
Impedance:	50 Ohms
Frequency Range:	0-4 GHz
Material:	Body Brass Nickel plated
	Contact Brass Gold plated
	Insulotor Teflon
	Nut Brass Nickel plated
RoHS Compliance:	Yes
Technical Detail:	Refer to Emerson Document P/N 27-0000

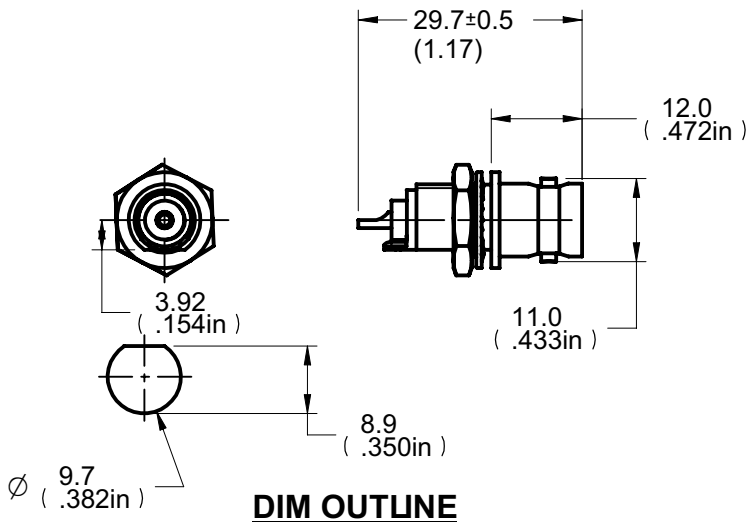

DIM OUTLINE

CUSTOMER COPY

TOLERANCE UNLESS OTHERWISE SPECIFIED		DRAWN BY TERRY.W	DATE 03-20-09
DECIMALS	mm	CHECKED BY BETTY.YU	DATE 03-20-09
X	± 0.5		
X.X	± 0.3	APPROVED BY THOMAS	DATE 03-20-09
X.XX	± 0.1		
ANGLES	± 0.5°	U/M mm	

THIS DRAWING WAS PRODUCED BY COMPUTER, DO NOT SCALE DRAWING OR UPDATE MANUALLY.

EMERSON Network Power — Connectivity Solutions

TITLE
FRONT MOUNT BULKHEAD JACK RECEPTACLE WITH SOLDER TAB

SHEET	DRAWING NO.	SIZE
1 OF 1	CP1094AST -CUST	A