THIS DRAWING IS UNPUBLISHED. RELEASED FOR PUBLICATION - ,- .
© COPYRIGHT - BY TYCO ELECTRONICS CORPORATION. ALL RIGHTS RESERVED.

LOC	DIST
AD	00

REVISIONS

P	LTR	DESCRIPTION	DATE	DWN	APVD
	K2	REVISED PER ECO-10-022188	10NOV10	HMR	JG

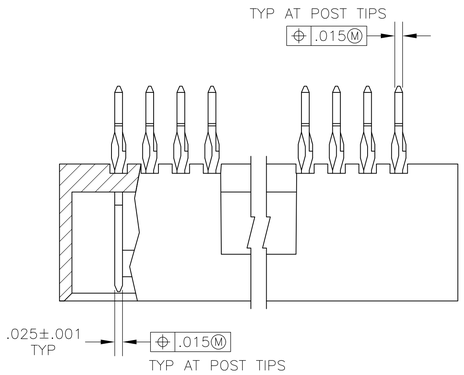

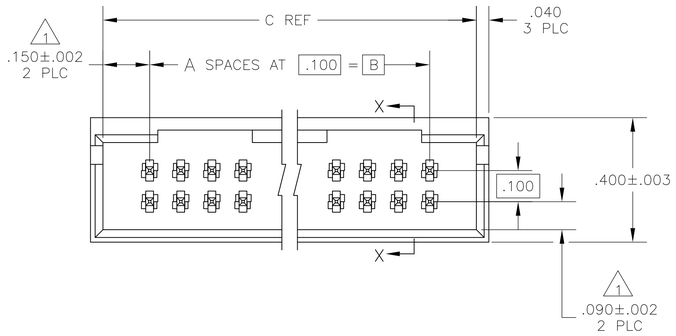

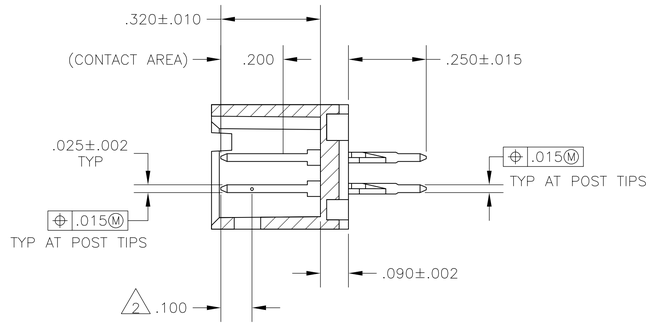

SECTION X–X

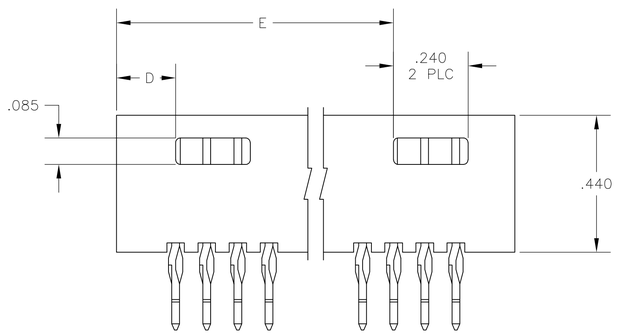

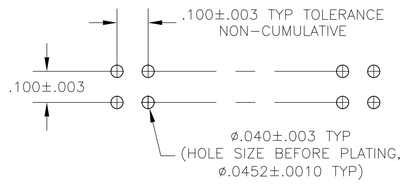

RECOMMENDED HOLE LAYOUT

1. THE NOTED DIMENSIONS APPLY AT THE INTERSECTION OF THE POST AND HOUSING
2. POINT OF MEASUREMENT FOR PLATING THICKNESS
3. .000030 GOLD IN CONTACT AREA, .000100–.000200 MATTE TIN–LEAD ON THE SOLDER TAIL, ALL OVER .000050 NICKEL
4. .000030 GOLD IN CONTACT AREA, .000100–.000200 MATTE TIN ON THE SOLDER TAIL, ALL OVER .000050 NICKEL
5. OBSOLETE PARTS: OBSOLETE CIS STREAMLINING PER D.RENAUD/D.SINISI

PLATING		E	D	C	B	A	NO OF POSN	ASSEMBLY PART NUMBER
OBSOLETE (5)	4	2.890	.190	3.200	2.900	29	60	~~7-103337-8~~
	4	1.890	.190	2.200	1.900	19	40	~~6-103337-8~~
	4	1.590	.190	1.900	1.600	16	34	6-103337-5
	4	1.190	.190	1.500	1.200	12	26	6-103337-1
	4	—	.390	1.000	.700	7	16	5-103337-6
OBSOLETE (5)	3	2.890	.190	3.200	2.900	29	60	~~2-103337-8~~
OBSOLETE	3	2.790	.190	3.100	2.800	28	58	2-103337-7
OBSOLETE	3	2.690	.190	3.000	2.700	27	56	2-103337-6
OBSOLETE	3	2.590	.190	2.900	2.600	26	54	2-103337-5
OBSOLETE	3	2.490	.190	2.800	2.500	25	52	2-103337-4
OBSOLETE	3	2.390	.190	2.700	2.400	24	50	2-103337-3
OBSOLETE	3	2.290	.190	2.600	2.300	23	48	2-103337-2
OBSOLETE	3	2.190	.190	2.500	2.200	22	46	2-103337-1
OBSOLETE	3	2.090	.190	2.400	2.100	21	44	2-103337-0
OBSOLETE	3	1.990	.190	2.300	2.000	20	42	1-103337-9
	3	1.890	.190	2.200	1.900	19	40	1-103337-8
OBSOLETE	3	1.790	.190	2.100	1.800	18	38	1-103337-7
OBSOLETE	3	1.690	.190	2.000	1.700	17	36	1-103337-6
	3	1.590	.190	1.900	1.600	16	34	1-103337-5
OBSOLETE	3	1.490	.190	1.800	1.500	15	32	1-103337-4
OBSOLETE	3	1.390	.190	1.700	1.400	14	30	1-103337-3
OBSOLETE	3	1.290	.190	1.600	1.300	13	28	1-103337-2
	3	1.190	.190	1.500	1.200	12	26	1-103337-1
OBSOLETE	3	1.090	.190	1.400	1.100	11	24	1-103337-0
OBSOLETE	3	.990	.190	1.300	1.000	10	22	103337-9
OBSOLETE	3	.890	.190	1.200	.900	9	20	103337-8
OBSOLETE	3	—	.490	1.100	.800	8	18	103337-7
	3	—	.390	1.000	.700	7	16	103337-6
OBSOLETE	3	—	.390	.900	.600	6	14	103337-5
OBSOLETE	3	—	.290	.800	.500	5	12	103337-4
OBSOLETE	3	—	.290	.700	.400	4	10	103337-3
OBSOLETE	3	—	.190	.600	.300	3	8	103337-2
OBSOLETE	3	—	.190	.500	.200	2	6	103337-1

THIS DRAWING IS A CONTROLLED DOCUMENT.

DIMENSIONS: INCHES

TOLERANCES UNLESS OTHERWISE SPECIFIED:
0 PLC ± –
1 PLC ± –
2 PLC ± –
3 PLC ± –
4 PLC ± –
ANGLES ± –

MATERIAL HOUSING: FLAME RETARDANT THERMOPLASTIC, COLOR–BLACK
POSTS: Cu–Ni–Sn

FINISH: SEE TABLE

DWN H MOLL 01SEP87
CHK T. CLARK 03SEP87
APVD T. CLARK 03SEP87
PRODUCT SPEC —
APPLICATION SPEC —
WEIGHT —

Tyco Electronics
Tyco Electronics Corporation
Harrisburg, Pa 17105–3608

NAME: HDR ASSY, MOD II, COMPLIANT PIN, DBL ROW, .100X.100 C/L, 4 SIDED SHROUD

SIZE A1 | CAGE CODE 00779 | DRAWING NO C-103337 | RESTRICTED TO —

CUSTOMER DRAWING | SCALE 4:1 | SHEET 1 OF 1 | REV K2

AMP 4805 REV 31MAR2000

12SEP05 3:51pm us001193 H:\dmtmod\ECs\e022405cIndia\103337-c.dwg