THIS DRAWING IS UNPUBLISHED. RELEASED FOR PUBLICATION 20
© COPYRIGHT 20 BY - ALL RIGHTS RESERVED.

REVISIONS

P	LTR	DESCRIPTION	DATE	DWN	APVD
	J	ECO-14-015233	27APR2015	LL	SH

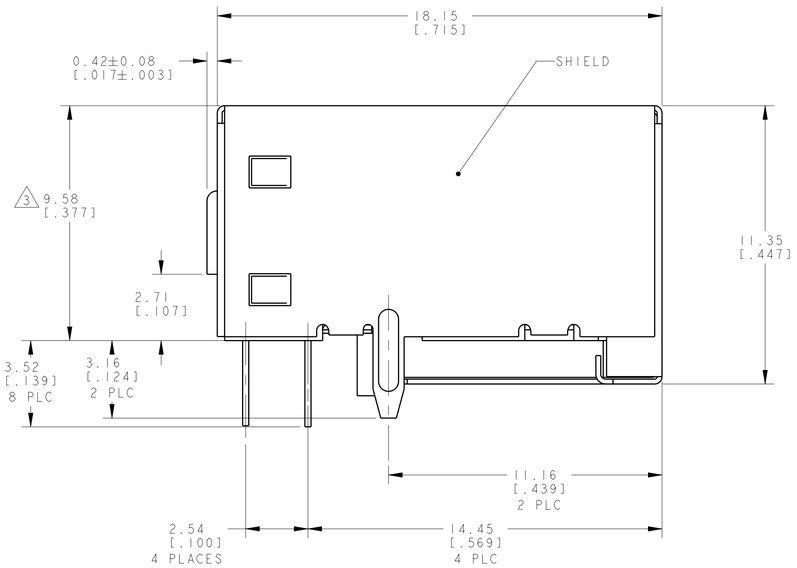

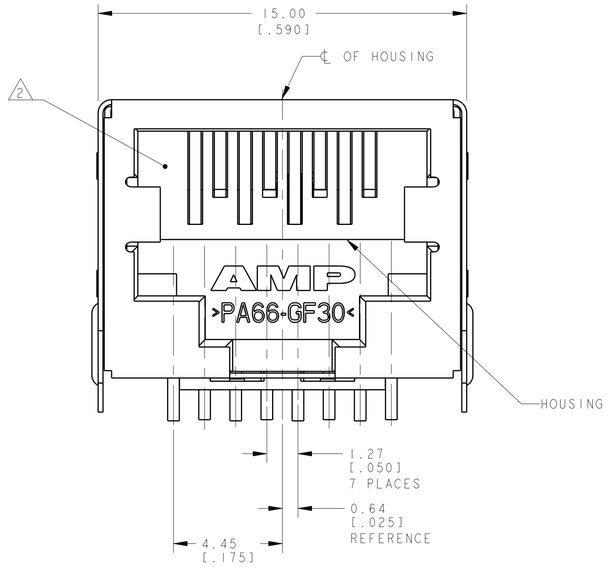

1. MATERIAL: HOUSING - HIGH TEMPERATURE NYLON, BLACK, UL 94V-O. TERMINALS - 0.25[.010] THICK PHOSPHOR BRONZE PLATED WITH 3.81µm[.000150] MINIMUM THICK BRIGHT TIN-LEAD IN SOLDER AREA, 1.27µm[.000050] MINIMUM GOLD IN LOCALIZED PLATE AREA. ENTIRE TERMINAL PLATED WITH 1.27µm[.000050] MINIMUM THICK NICKEL. SHIELD - 0.2[.0079] THICK COPPER ZINC ALLOY, PREPLATED WITH 2.03µm [.000080] MIN THICK BRIGHT TIN OVER 1.27µm [.000080] MIN THICK NICKEL

2. JACK CAVITY CONFORMS TO FCC RULES AND REGULATIONS PART 68, SUBPART F.

3. THIS DIMENSION REPRESENTS THE TOTAL HEIGHT OF THE CONNECTOR FROM THE TOP OF THE PC BOARD.

4. PACKAGED 66 ASSEMBLIES PER PVC TRAY, 396 PER BOX.

5. DIELECTRIC WITHSTANDING VOLTAGE BETWEEN SHIELD AND TERMINAL IS 1500 VAC

6. MANUFACTURING DATE CODE:
ORIENTED AND LOCATED APPROXIMATELY AS SHOWN. LASER PRINTING. TEXT HEIGHT APPROXIMATELY 2MM.
FIRST 2 DIGITS = LAST 2 DIGITS OF YEAR
NEXT 2 DIGITS = MANUFACTURING WORK WEEK
LAST DIGIT = DAY OF WEEK WITH SUNDAY = 1

7. MATERIAL: HOUSING - HIGH TEMPERATURE NYLON, BLACK, UL 94V-O. TERMINALS - 0.25[.010] THICK PHOSPHOR BRONZE PLATED WITH 3.81µm[.000150] MINIMUM THICK MATTE TIN IN SOLDER AREA, 1.27µm[.000050] MINIMUM GOLD IN LOCALIZED PLATE AREA. ENTIRE TERMINAL PLATED WITH 1.27µm[.000050] MINIMUM THICK NICKEL. SHIELD - 0.2[.0079] THICK COPPER ZINC ALLOY, PREPLATED WITH 2.03µm[.000080] MIN THICK BRIGHT TIN OVER 1.27µm [.000050] MINIMUM THICK NICKEL

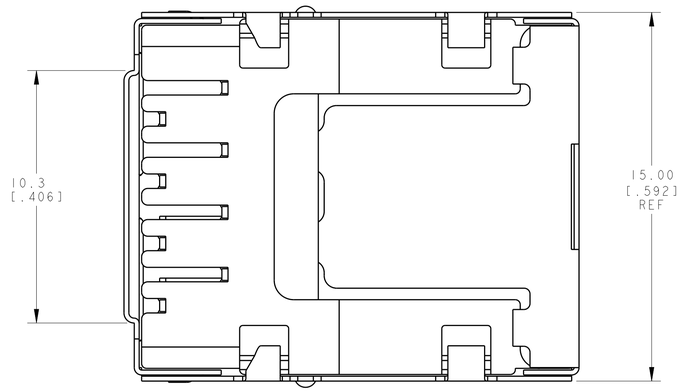

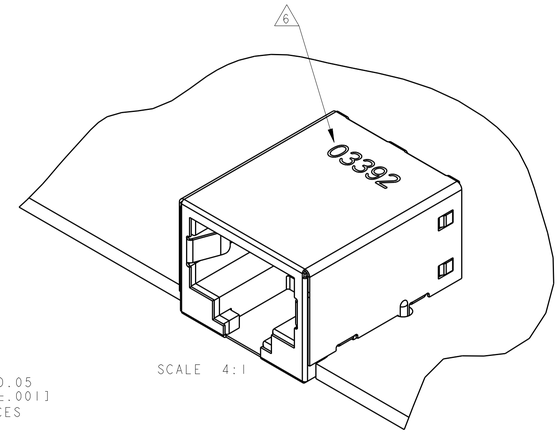

SCALE 4:1

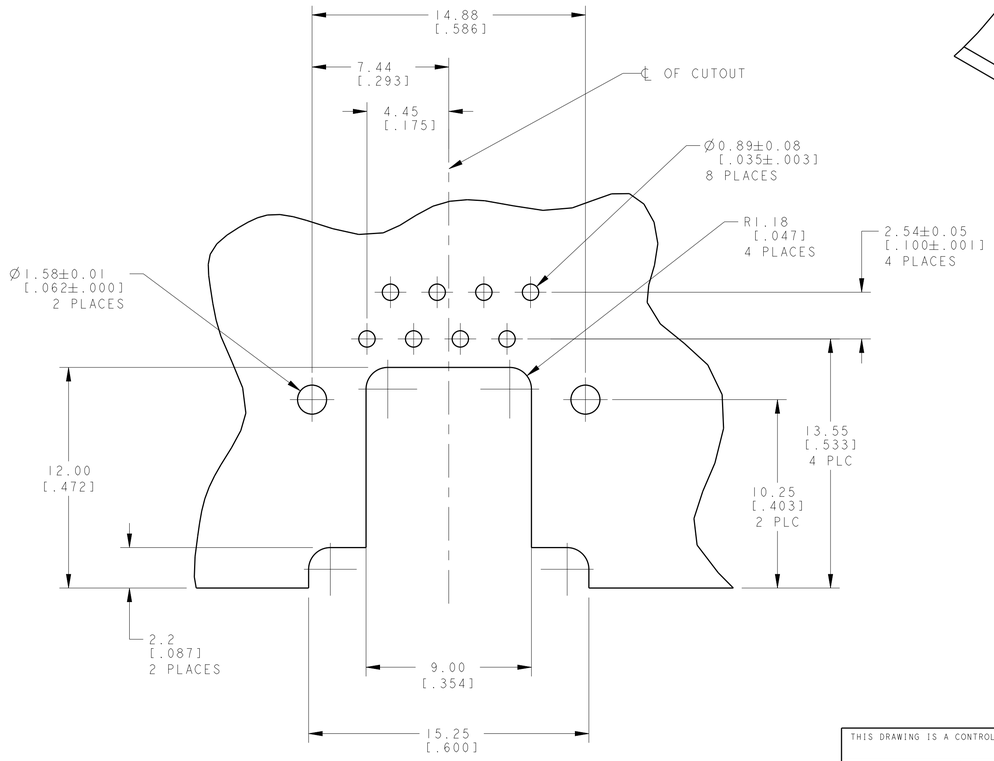

SUGGESTED PRINTED CIRCUIT BOARD LAYOUT COMPONENT SIDE
SCALE 6:1

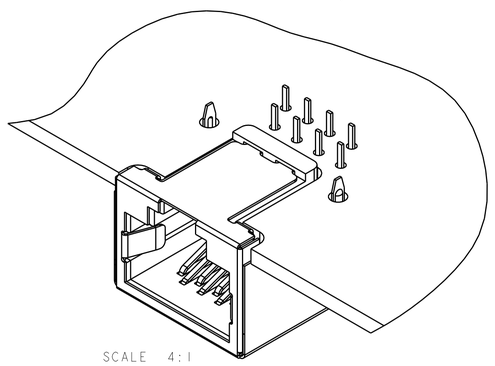

SCALE 4:1

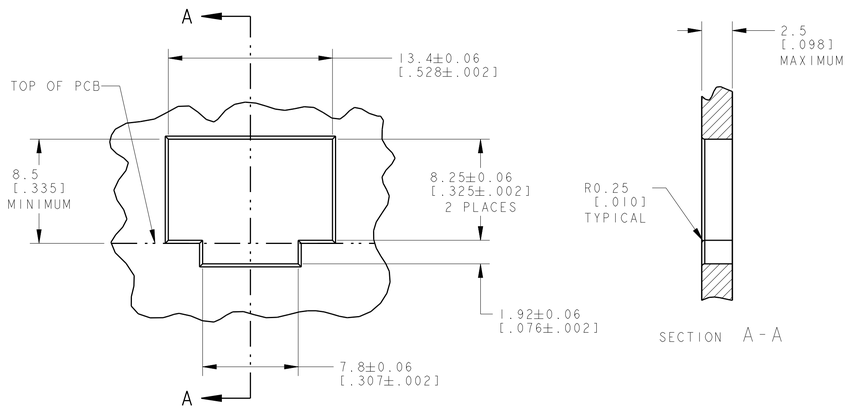

SECTION A-A

SUGGESTED PANEL CUTOUT
SCALE 4:1

	MATERIAL/FINISH	PART NUMBER
	7	406732-2
OBSOLETE	1	~~406732-1~~

THIS DRAWING IS A CONTROLLED DOCUMENT.

DIMENSIONS: mm[INCHES]

TOLERANCES UNLESS OTHERWISE SPECIFIED:
0 PLC ±-
1 PLC ±-
2 PLC ±0.13[.005]
3 PLC ±-
4 PLC ±-
ANGLES ±-

MATERIAL: SEE NOTE 1 -
FINISH: SEE NOTE 1 -

DWN L. VARSIK 14FEB01
CHK L. VARSIK 14FEB01
APVD L. VARSIK 14FEB01
PRODUCT SPEC 108-1163
APPLICATION SPEC 114-2048
WEIGHT 3.4 grams

TE Connectivity

NAME: MODULAR JACK ASSEMBLY, 8 POSITION, SHIELDED, 10mm, WITHOUT PANEL TABS, WITHOUT POSTS

SIZE	CAGE CODE	DRAWING NO	RESTRICTED TO
A1	00779	C-406732	-

CUSTOMER DRAWING | SCALE 8:1 | SHEET 1 OF 1 | REV J

4805 (3/13)