MICRO SWITCH
FREEPORT ILLINOIS U S A
A DIVISION OF HONEYWELL
FED. MFG. CODE 91929

SWITCH-ENCLOSED

CATALOG LISTING
5EN1-6

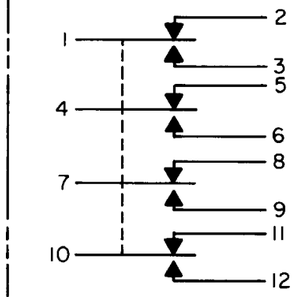

CIRCUIT DIAGRAM

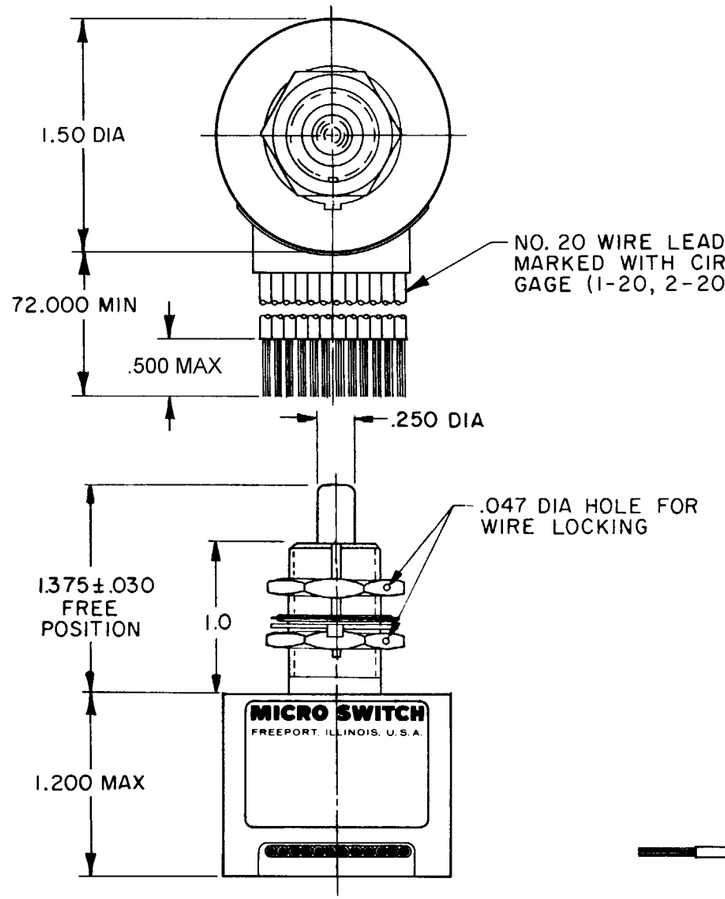

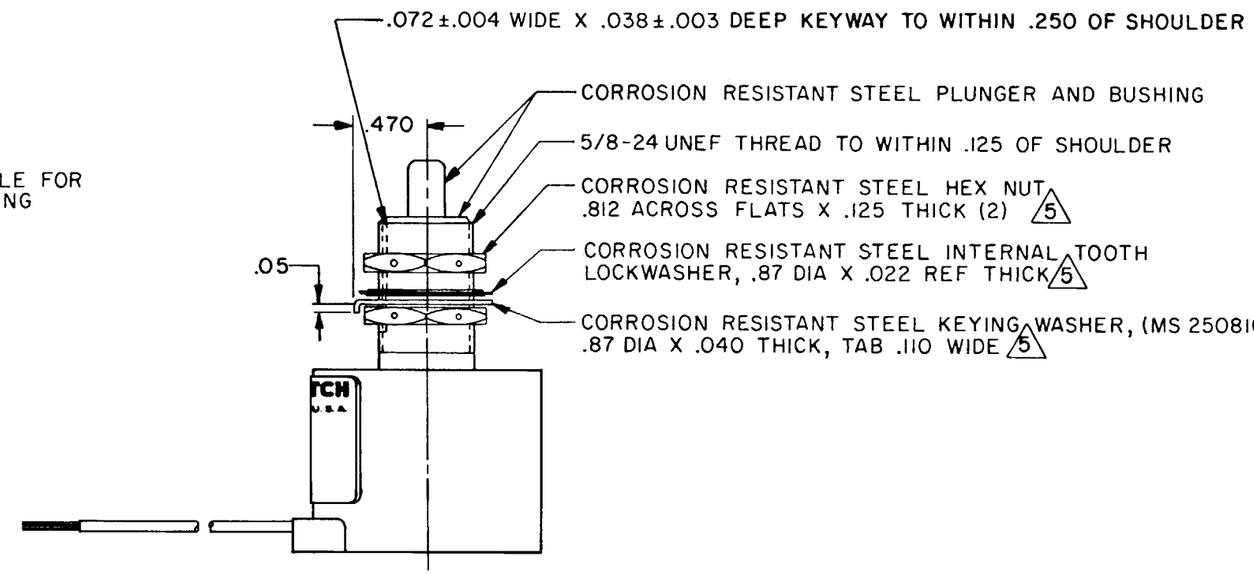

NOTES
1 - CORROSION RESISTANT STEEL ENCLOSURE
2 - SWITCH SEALED PER MIL-PRF-8805 SYMBOL 4
3 - CIRCUIT DIAGRAM AND CATALOG LISTING ARE SHOWN ON NAMEPLATE
4 - COINCIDENCE OF OPERATING AND RELEASING POINTS: .015 OF PLUNGER TRAVEL
5 - HARDWARE MAY BE PACKAGED UNASSEMBLED PER MIL-PRF-8805

THIS DRAWING COVERS A PROPRIETARY ITEM AND IS THE PROPERTY OF MICRO SWITCH, A DIVISION OF HONEYWELL. THIS DRAWING IS NOT TO BE COPIED OR USED WITHOUT THE APPROVAL OF MICRO SWITCH.

THIRD ANGLE PROJECTION

SCALE FULL

DO NOT SCALE PRINT

TOLERANCES
APPLY TO DESIGN UNITS. CONVERSIONS ARE ONLY FOR REFERENCE. UNLESS NOTED TOLERANCES ARE ±

	DIM. mm	TOL. mm/in	DIM. in	TOL. mm/in
NO PLACES	X	1/.04		
ONE PLACE	X.X	0.4/.016	X X	0.8/.03
TWO PLACES	X.XX	0.15/.006	X XX	0.38/.015
THREE PLACES			X XXX	0.13/.005
ANGLES				

DESIGN UNITS SI METRIC ☐ US CUSTOMARY ☒

RAW MATERIAL—COMMERCIAL STANDARD
MICRO SWITCH STANDARDS APPLY
DIMENSIONS ARE TO BE MET BEFORE PROTECTIVE COATINGS ARE APPLIED

WEIGHT 13.5 OZ MAX

CHARACTERISTICS

OPERATING FORCE ---------- 6-12 LB
FULL OVERTRAVEL FORCE ------ 30 LB MAX
RELEASE FORCE ---------- 4 LB MIN
PRETRAVEL ---------- .040 MAX
DIFFERENTIAL TRAVEL ------- .030 MAX
OVERTRAVEL ---------- .250 MIN

ELECTRICAL DATA

CONTACT ARRANGEMENT
S P D T (4)

LOAD	28 VDC	
	SEA LEVEL	50,000 FT.
RES	4	4
IND	2	2
MOTOR	4	

CATALOG LISTING 5EN1-6
PAGE 1 OF 1
RELEASE NO. SR-5225
REPLACES
ISSUE M 21
CHECK

REVISIONS

A	CO 44351	CEB 28 JUNE 79
B	0047573	JAP 5 AUG 80
C	CO 51725-D	CJH 11 JAN 83
D	C082536	JAK 11 MAR 96
E	0001487	CSL 7 OCT 03

RASTER
DRAWN CEB 28 JUNE 79
CHECK