REVISIONS		
ISS	ZONE	DESCRIPTION\PER REQUEST\DATE
A1	D-4	ADDED ACCOUNT\N/A\12-17-01'
B	A-3	NO.3 WAS CHANGED\RD-DM92022001L\02-20-03'

REMARK:1. NO.2 MUST WITHSTAND A 4 lbs. MIN. PUSHOUT FORCE FROM NO.1 AFTER STAKING OPERATION
2. REMARK 1 IS MAINTAINED BY STAMPING THE FOUR POINTS SHOWN ON THE DRAWING WITHOUT PUNCTURING NO.1

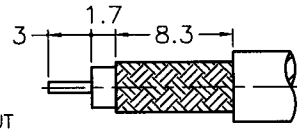

RECOMMENDED CABLE STRIPPING DIM'S

1. CRIMPED FERRULE HEX CRIMP SIZE .213"
2. CRIMPED CONTACT PIN AFM8 ADJUST TO 6 OR 7 POSITIONER K1470

CONFIGURATION CONTROL:
NO CHANGES PERMITTED TO DRAWING WITHOUT PPAP QUALIFIED CUSTOMER APPROVAL

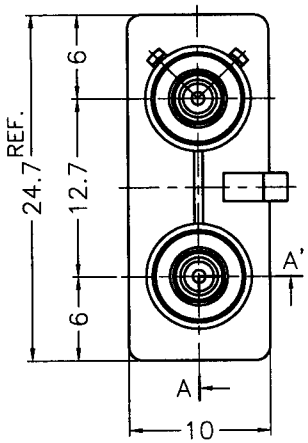

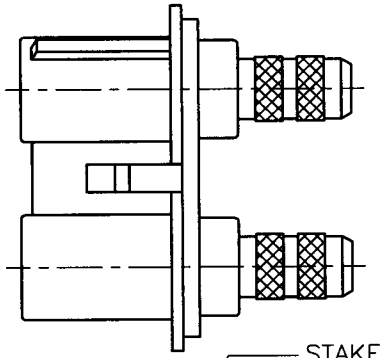

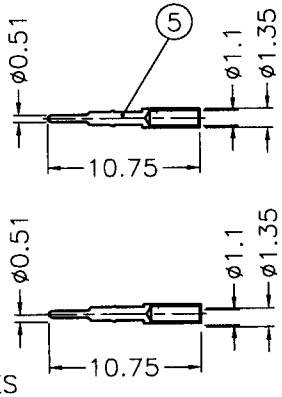

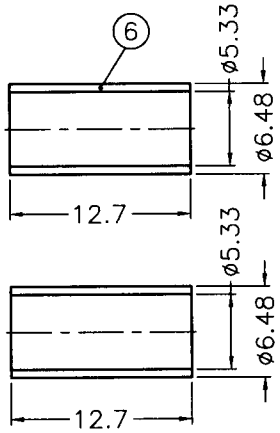

STAKE IN 4 PLACES EQUALLY SPACED 90° APART (SEE REMARK 1,2)

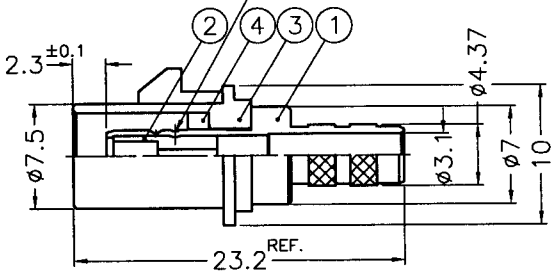

A-A' SECTION

NOTES: FINISH (PLATING THICKNESS IN MICRO-INCHES)
1. BRASS PER QQ-B-626, ALLOY 360, 1/2 H ; JIS H3250 C 3604BD OR EQUIVALENT
2. NICKEL PL. 60 MIN. THICK OVER OPTIONAL COPPER STRIKE
3. GOLD PL. 30 MIN. THICK OVER NICKEL PL. 100 MIN. THICK OVER OPTIONAL COPPER STRIKE
4. TEFLON MIL-P-19468 OR EQUIVALENT
5. COPPER PER ASTM B-75 ALLOY C12200 OR EQUIVALENT
6. PBT(WITH 15% GLASS FIBER) PER CHANG CHUN GRADE 4115202 OR EQUIVALENT

TABLE

KEY CODING	PART NO.	DRAWING NO.	ITEM NO.	LOCK COVER
A	FA2-NASP-C04-9	FKT1121AW-008-NT30G-50	FK2121AAA57NC5F	FKLC40101B
B	FA2-NBSP-C04-9	FKT1121BW-008-NT30G-50	FK2121AAB57NC5F	FKLC40102B
C	FA2-NCSP-C04-9	FKT1121CW-008-NT30G-50	FK2121AAC57NC5F	FKLC40103B
D	FA2-NDSP-C04-9	FKT1121DW-008-NT30G-50	FK2121AAD57NC5F	FKLC40104B
E	FA2-NESP-C04-9	FKT1121EW-008-NT30G-50	FK2121AAE57NC5F	FKLC40105B
F	FA2-NFSP-C04-9	FKT1121FW-008-NT30G-50	FK2121AAF57NC5F	FKLC40106B
G	FA2-NGSP-C04-9	FKT1121GW-008-NT30G-50	FK2121AAG57NC5F	FKLC40107B
H	FA2-NHSP-C04-9	FKT1121HW-008-NT30G-50	FK2121AAH57NC5F	FKLC40108B
I	FA2-NISP-C04-9	FKT1121IW-008-NT30G-50	FK2121AAI57NC5F	FKLC40109B
K	FA2-NKSP-C04-9	FKT1121KW-008-NT30G-50	FK2121AAK57NC5F	FKLC40110B
Z	FA2-NZSP-C04-9	FKT1121ZW-008-NT30G-50	FK2121AAZ57NC5F	FKLC40111B

NO.	DESCRIPTION	MATERIAL	FINISH	Q'TY	DRAWING NO.
6	FERRULE	NOTE 5	NOTE 2	2	FKFR00201A
5	CONTACT PIN	NOTE 1	NOTE 3	2	FKCP00301A
4	RING	NOTE 1	NOTE 2	2	FKLR00101A
3	LOCK COVER	NOTE 6		1	SEE TABLE
2	INSULATOR	NOTE 4	NATURAL	2	FKNS00401A
1	BODY	NOTE 1	NOTE 2	2	FKBD00401A

DIMENSIONS ARE IN MILLIMETERS
UNLESS OTHERWISE SPECIFIED TOLERANCES
0.5-6 = ±0.2
6-30 = ±0.4
30-120 = ±0.6
120-315 = ±1
315-1000 = ±1.6
1000-2000 = ±2.4

SCALE 2/1 | ISSUE B

PART NO. FA2-NXSP-C04-9
APPROVED MARK CHU DATE 05-02-03'
CHECKED COASE WANG DATE 05-02-03'
DRAWN LILY CHIU DATE 05-02-03'
FILE NO.F:\DWG\FKT\1121XX\008\50\NT30G-B-PPAP

Amphenol
Danbury,CT,USA-Tainan,Taiwan-Shenzhen,China

TITLE FAKRA TWIN SMB CRIMP PLUG (FOR RG-58A/U, 58C/U CABLE)
DRAWING NO. FKT1121XX-008-NT30G-50
ITEM NO. FK2121AAX57NC5F