WIRE SIZE	MAX INSULATION	"A" ±.012 / ±0.30	"C" ±.012 / ±0.30	"D" ±.005 / ±0.13	"E" ±.012 / ±0.30	"G" ±.005 / ±0.13	"H" ±.012 / ±0.30
20-24	.073/1.85	.090/2.29	.100/2.54	.030/0.76 R.	.075/1.91	.025/0.64 R.	.082/2.08
26-30	.050/1.27	.075/1.91	.083/2.10	.025/0.64 R.	.058/1.47	.020/0.51 R.	.065/1.65
18 OR 0.75mm²	.073/1.85	.091/2.31	.099/2.51	.030/0.76 R.	.086/2.18	.029/0.74 R.	.094/2.39

MATERIAL NUMBER	PLATING	WIRE SIZE	FORM
43030-0001	A	20-24	CHAIN
43030-0002	B	20-24	CHAIN
43030-0003	C	20-24	CHAIN
43030-0004	A	26-30	CHAIN
43030-0005	B	26-30	CHAIN
43030-0006	C	26-30	CHAIN
43030-0007	A	20-24	LOOSE
43030-0008	B	20-24	LOOSE
43030-0009	C	20-24	LOOSE
43030-0010	A	26-30	LOOSE
43030-0011	B	26-30	LOOSE
43030-0012	C	26-30	LOOSE
43030-0038	A	18 OR 0.75mm² (SEE NOTE 10)	CHAIN

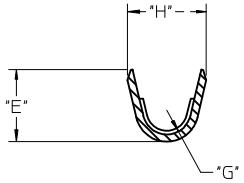

SECTION V-V

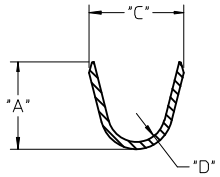

SECTION W-W

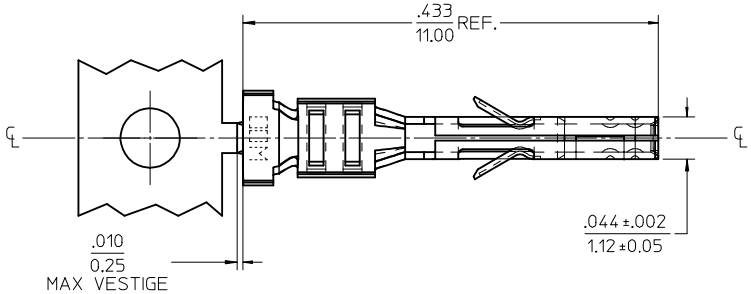

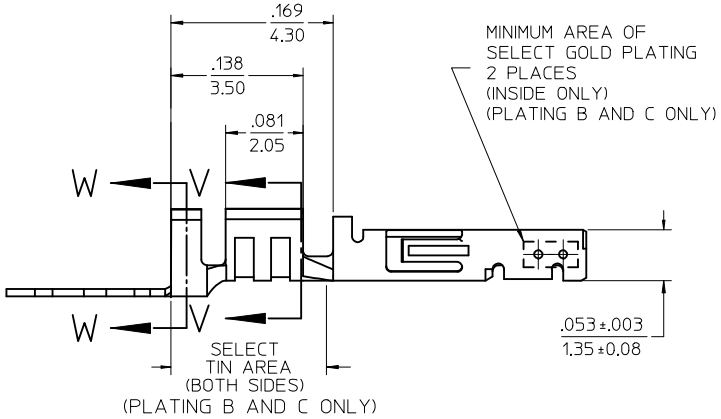

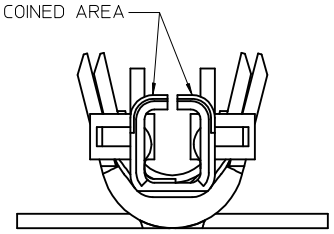

(SCALE 20:1)

NOTES

1) MATERIAL: PHOSPHOR BRONZE ALLOY
2) TERMINAL PLATING:
   "A" - HOT TIN DIP: .000040/0.00102 MIN. OVERALL
   "B" - .000015/0.00038 MIN. SELECT GOLD
   .000100/0.00254 MIN. SELECT TIN
   ALL OVER .000050/0.00127 MIN. NICKEL OVERALL.
   "C" - .000030/0.00076 MIN. SELECT GOLD
   .000100/0.00254 MIN. SELECT TIN
   ALL OVER .000050/0.00127 MIN. NICKEL OVERALL.
   PLATING FINISHES B AND C ARE POST PLATED.
3) PRODUCT SPECIFICATION: PS-43045, PS-43650, PS-44300-001.
4) PACKAGING SPECIFICATION: PK-43030-001 (REEL), PK-43030-003 (LOOSE).
5) TERMINAL FOR USE IN A MICRO FIT RECEPTACLE #43025-****, 43645-****, AND 44133-****.
6) FOR TERMINAL ORIENTATION IN RECEPTACLE SEE DRAWING #SDA-43025 OR SDA-43645.
7) THIS TERMINAL IS DESIGNED IN METRIC.
8) MOLEX RECOMMENDS THE USE OF MICRO-FIT TEST PLUG (SERIES 44242) WHENEVER CONTINUITY TESTING IS PERFORMED. TEST PLUGS MUST NOT BE USED TO MAKE OR BREAK UNDER LOAD. MOLEX DOES NOT RECOMMEND USING STANDARD MATING COMPONENTS (SERIES 43020, 43045, 43640, 43650, OR 43031) FOR HARNESS TESTING PURPOSES.
9) TEXT ON PART IS FOR REFERENCE ONLY. TEXT AND TEXT LOCATION MAY VARY DEPENDING ON PART NUMBER AND/OR TOOL.
10) PART NUMBER 43030-0038 IS DESIGNED FOR 18 AWG 1061 STYLE WIRE OR A .073/1.85 MAXIMUM INSULATION OUTSIDE DIAMETER.

UPDATE FACTORY ID
EC NO: UCP2017-2563 2017/05/30
DRWN:ZHARPER
CH'KD:
APPR:FSMITH 2017/09/29
DESCRIPTION
N6
REV

QUALITY SYMBOLS
=0
=0
=0

GENERAL TOLERANCES (UNLESS SPECIFIED)

	mm	INCH
4 PLACES	± ---	± ---
3 PLACES	± ---	± .010
2 PLACES	± 0.25	± .014
1 PLACE	± 0.35	± ---
0 PLACE	±	±

ANGULAR ±1/2°

DRAFT WHERE APPLICABLE MUST REMAIN WITHIN DIMENSIONS

DIMENSION STYLE: IN/MM
SCALE: 10:1
DESIGN UNITS: METRIC
THIRD ANGLE PROJECTION

		DATE
DRAWN BY	MUELLER	2002/08/03
CHECKED BY	MUELLER	2002/08/03
APPROVED BY	MARGULIS	2002/08/03

TITLE: MICRO-FIT (3.0) FEMALE CRIMP TERMINAL

molex

MATERIAL NO.: SEE CHART
DOCUMENT NO.: SD-43030-****
SHEET NO.: 1 OF 1
SIZE: C

THIS DRAWING CONTAINS INFORMATION THAT IS PROPRIETARY TO MOLEX INCORPORATED AND SHOULD NOT BE USED WITHOUT WRITTEN PERMISSION