106025

CONNECTOR P/N	ØD (µm)	CONNECTOR BODY COLOR	BOOT COLOR	CABLE Ø (mm)	CABLE TYPE
106025-2400	125.50	BLUE	WHITE	1.6	SINGLE MODE
106025-2600				2.0	
106025-3400	127.00	BEIGE		1.6	MULTIMODE
106025-3600				2.0	
106025-4400	125.00	BLUE		1.6	SINGLE MODE
106025-4600				2.0	
106025-5400	126.00			1.6	
106025-5600				2.0	
106025-6400	125.25			1.6	
106025-6600				2.0	

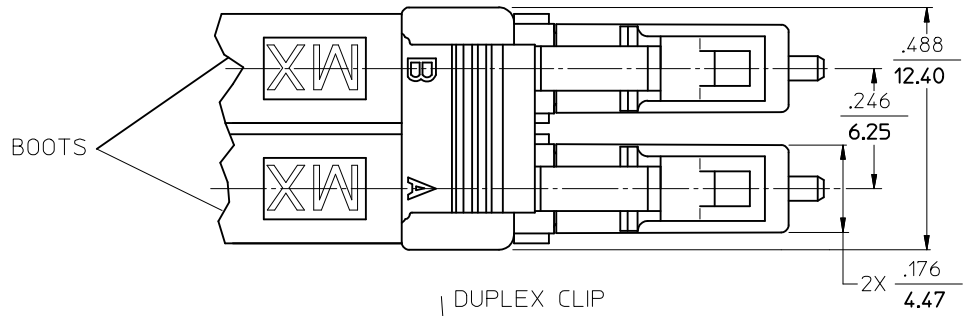

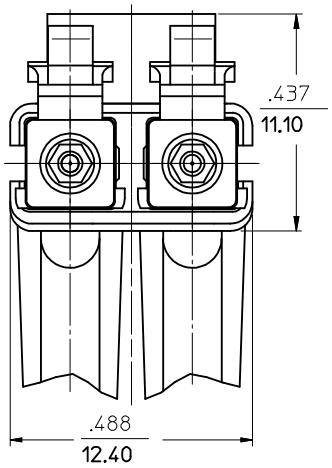

VIEW A

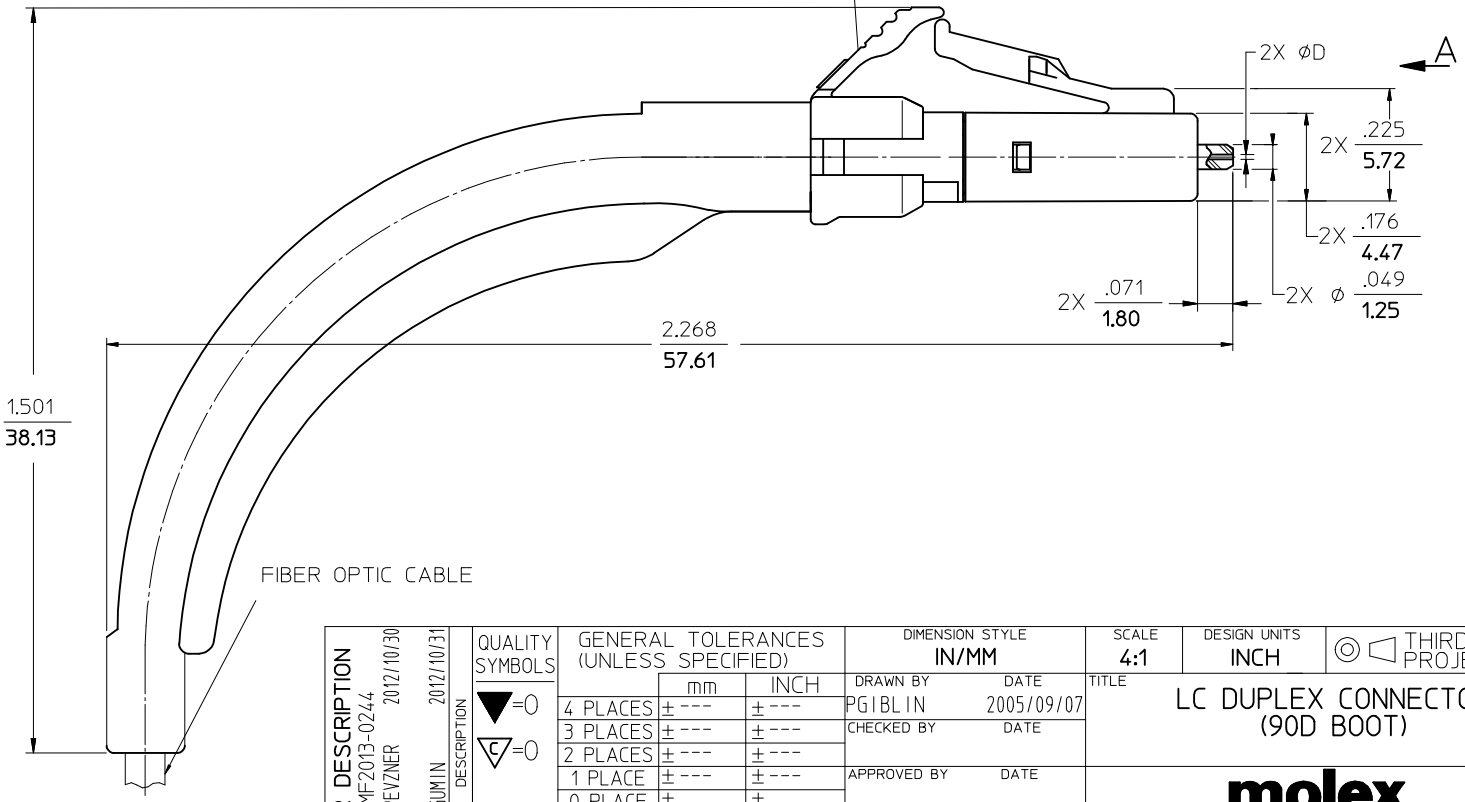

NOTES:

1. DUPLEX CLIP AND BOOTS SHOULD BE ASSEMBLED AFTER POLISHING OPERATION.

ENTER DESCRIPTION
EC NO: MF2013-0244
DRWN:KPEYZNER 2012/10/30
CH'KD:
APPR: IGUMIN 2012/10/31
DESCRIPTION
A1
REV

QUALITY SYMBOLS
▼=0
Ⓒ=0

GENERAL TOLERANCES (UNLESS SPECIFIED)

	mm	INCH
4 PLACES	± ---	± ---
3 PLACES	± ---	± ---
2 PLACES	± ---	± ---
1 PLACE	± ---	± ---
0 PLACE	±	±

ANGULAR ±1/2°
DRAFT WHERE APPLICABLE MUST REMAIN WITHIN DIMENSIONS

DIMENSION STYLE: IN/MM
SCALE: 4:1
DESIGN UNITS: INCH
THIRD ANGLE PROJECTION

DRAWN BY: PGIBLIN DATE: 2005/09/07
CHECKED BY DATE
APPROVED BY DATE

TITLE: LC DUPLEX CONNECTOR (90D BOOT)

molex

MATERIAL NO.: SEE TABLE
DOCUMENT NO.: SD-1060EE-EEE0
SHEET NO.: 1 OF 1
SIZE: B

THIS DRAWING CONTAINS INFORMATION THAT IS PROPRIETARY TO MOLEX INCORPORATED AND SHOULD NOT BE USED WITHOUT WRITTEN PERMISSION