THIS DRAWING IS UNPUBLISHED. RELEASED FOR PUBLICATION -,- .
© COPYRIGHT - By - ALL RIGHTS RESERVED.

REVISIONS

| P | LTR | DESCRIPTION | DATE | DWN | APVD |
|---|---|---|---|---|---|
| | C1 | REVISED PER ECO-11-004820 | 11MAR11 | RK | HMR |
| | D | REVISED PER ECO-17-000037 | 10MAR2017 | RS | MZ |

NOTES:

1. MATERIAL: NEOPRENE, BLACK.
2. OBSOLETE PART NUMER.

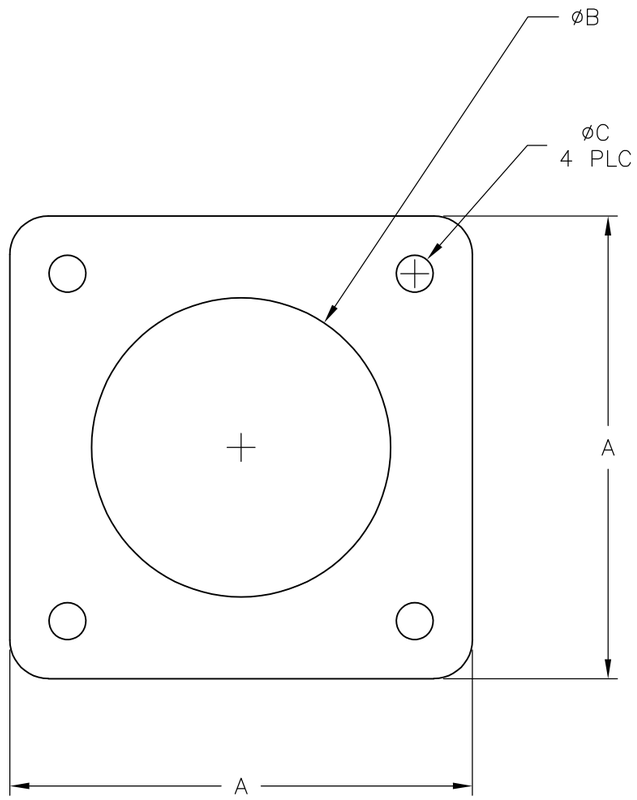


| | C | B | A | CPC SHELL SIZE | PART NO. |
|---|---|---|---|---|---|
| 2 | .125 | 1.030 | 1.185 | 14 | 81665-8 |
| 2 | .120 | 1.110 | 1.530 | 22 | 81665-7 |
| 2 | .142 | 1.492 | 1.950 | 28 | 81665-6 |
| | .145 | 1.488 | 1.875 | 23 | 81665-5 |
| | .120 | .862 | 1.375 | 13 | 81665-4 |
| | .120 | .737 | 1.188 | 11 | 81665-3 |
| | .145 | 1.100 | 1.500 | 17 | 81665-2 |
| | .120 | .970 | 1.500 | - | 81665-1 |

THIS DRAWING IS A CONTROLLED DOCUMENT.

DIMENSIONS: INCHES

TOLERANCES UNLESS OTHERWISE SPECIFIED:

| | |
|---|---|
| 0 PLC | ± - |
| 1 PLC | ± - |
| 2 PLC | ± - |
| 3 PLC | ± .015 |
| 4 PLC | ± - |
| ANGLES | ± - |

MATERIAL: 1

FINISH: -

DWN S SCHLEGEL 16JUL03
CHK S HEADER 7/16/03
APVD S HEADER 7/16/03
PRODUCT SPEC —
APPLICATION SPEC —
WEIGHT —

TE Connectivity

NAME: GASKET, FLANGE, CPC

| SIZE | CAGE CODE | DRAWING NO | RESTRICTED TO |
|---|---|---|---|
| A3 | 00779 | C-81665 | — |

CUSTOMER DRAWING

SCALE NTS | SHEET 1 OF 1 | REV D