THIS DRAWING IS UNPUBLISHED. RELEASED FOR PUBLICATION -,- .
© COPYRIGHT - By - ALL RIGHTS RESERVED.

LOC	DIST
G	86

REVISIONS

P	LTR	DESCRIPTION	DATE	DWN	APVD
	E2	REVISED PER ECO-11-004820	11MAR11	RK	HMR

AMP WIRE RANGE	FILE E66717	LR7189 Certified
16-14 AWG STRANDED	16-14 AWG STRANDED	16-14 AWG STRANDED

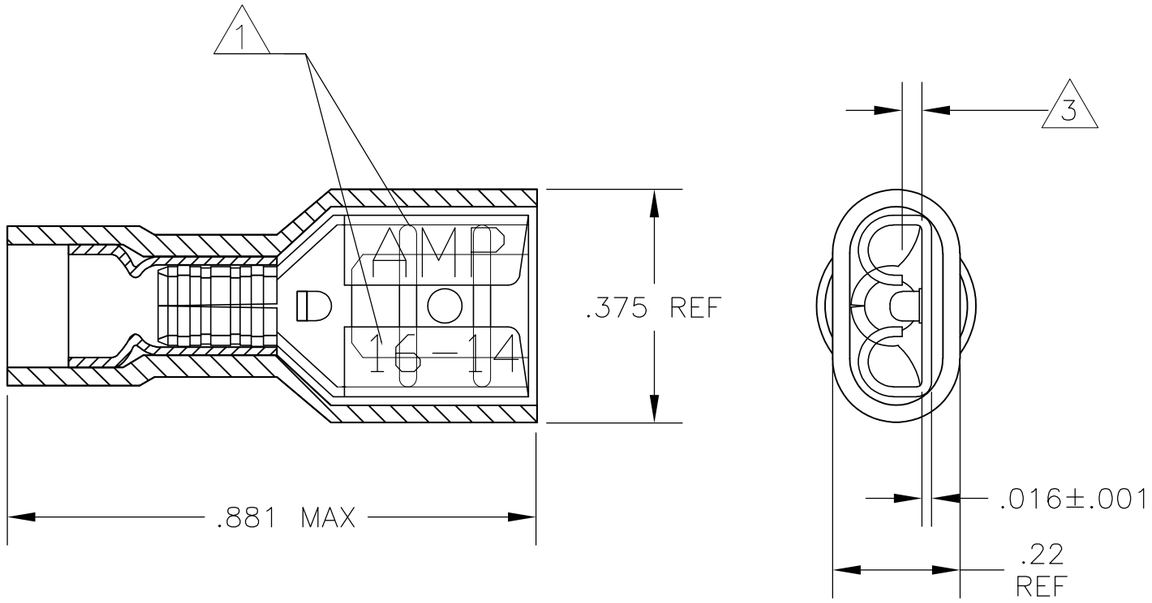

1. MARKED AMP 16-14
2. DESIGNED FOR WIRE INSULATION DIA OF .105-.160.
3. MATES WITH .250±.003 BY .032±.001 THK TAB.
4. BODY: BRASS, TIN PLATED SLEEVE: NYLON, BLUE
5. RATED FOR 15 MAX AMPERE

QTY	PACKAGE TYPE	PART NO.
100	LOOSE PIECE	8-696366-1
1000	LOOSE PIECE	696366-1

TE CONNECTIVITY
CUSTOMER SERVICE SYSTEM

FOR ADDITIONAL PRODUCT INFORMATION OR COPIES OF DRAWING AND TECHNICAL DOCUMENTS	PRODUCT INFORMATION CENTER 1-800-522-6752
FOR APPLICATION TOOLING INFORMATION	TOOLING ASSISTANCE CENTER 1-800-722-1111
FOR ORDER ENTRY	1-800-526-5142

MAX RECOMMENDED OPERATING TEMPERATURE: 105°C [221°F] -

VOLTAGE RATING: 300V MAX -

CIRCULAR MIL AREA: 2,050-5,180 STRANDED

THIS DRAWING IS A CONTROLLED DOCUMENT.

DIMENSIONS: INCHES

TOLERANCES UNLESS OTHERWISE SPECIFIED:
0 PLC ± -
1 PLC ± -
2 PLC ± -
3 PLC ± .008
4 PLC ± -
ANGLES ± -

MATERIAL - 4

FINISH - 4

DWN JR RUTH	07NOV01	
CHK T MICHIELUTTI	07NOV01	
APVD T MICHIELUTTI	07NOV01	
PRODUCT SPEC —		
APPLICATION SPEC 114-13076		
WEIGHT —		

TE Connectivity

NAME: RECEPTACLE, 250 SERIES, FASTON, FULLY INSULATED, WIRE: 16-14 AWG -

SIZE	CAGE CODE	DRAWING NO	RESTRICTED TO
A3	00779	C-696366	—

CUSTOMER DRAWING | SCALE 1:1 | SHEET 1 OF 1 | REV E2

1470-19 (3/11)