THIS DRAWING IS UNPUBLISHED. RELEASED FOR PUBLICATION -,- .
© COPYRIGHT - By - ALL RIGHTS RESERVED.

LOC	DIST
AF	50

REVISIONS

P	LTR	DESCRIPTION	DATE	DWN	APVD
	F	REVISED PER ECR-12-013459	28NOV2012	KH	PD

1 CONTINUOUS STRIP ON REELS.

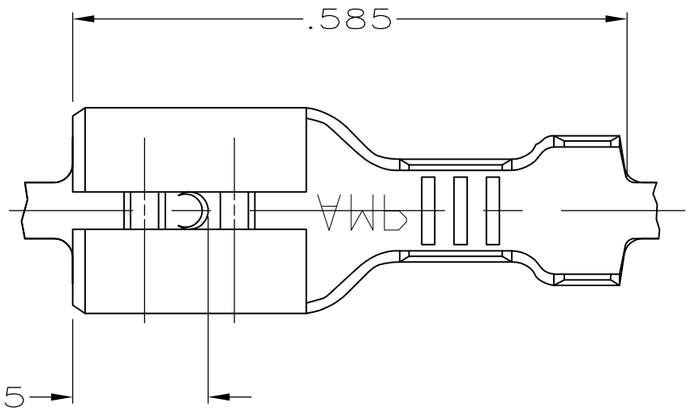

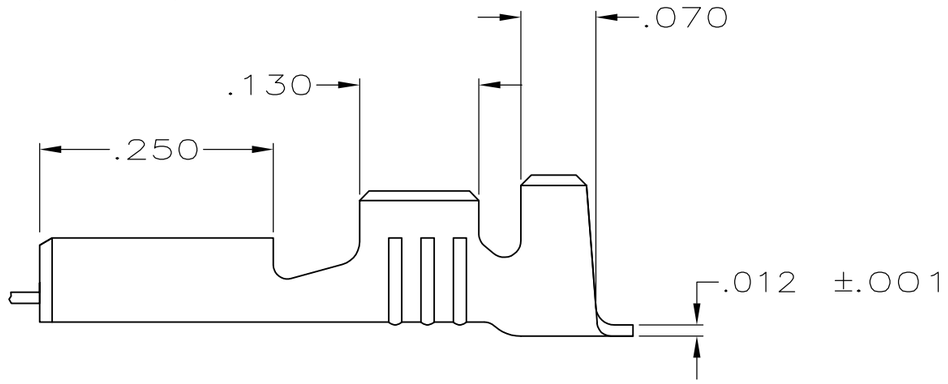

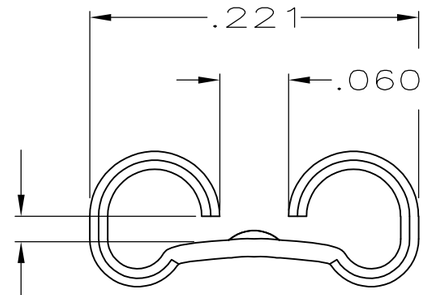

FITS .187 SERIES
FASTON RECEPTACLE

VIEW A—A
SCALE 10:1

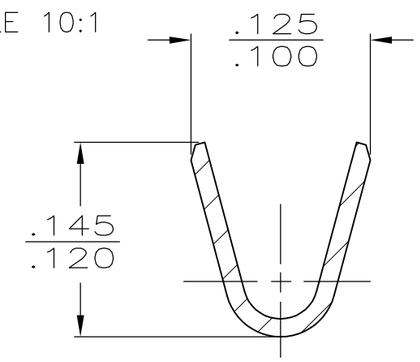

SECTION B—B
SCALE 10:1

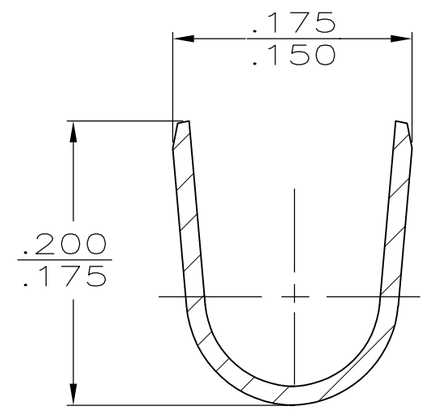

SECTION C—C
SCALE 10:1

FINISH	INSUL RANGE	WIRE SIZE	MATING TAB THK ±.001	PART NUMBER
TIN	.090—.130	20—16	.032	61758—2
—				61758—1

THIS DRAWING IS A CONTROLLED DOCUMENT.

DIMENSIONS: INCHES

TOLERANCES UNLESS OTHERWISE SPECIFIED:

0 PLC	± —
1 PLC	± —
2 PLC	± —
3 PLC	± .010
4 PLC	± —
ANGLES	± —

MATERIAL: BRASS

FINISH: SEE TABLE

DWN	JR RUTH	2/26/90
CHK	MS FEHER	2/26/90
APVD	C MEYERS	2/26/90
PRODUCT SPEC	—	
APPLICATION SPEC	—	
WEIGHT	—	

CUSTOMER DRAWING

TE Connectivity

NAME: RECEPTACLE, FASTON, .187 SERIES

SIZE	CAGE CODE	DRAWING NO	RESTRICTED TO
A3	00779	C-61758	—

SCALE	SHEET	REV
6:1	1 OF 1	F