THIS DRAWING IS UNPUBLISHED. RELEASED FOR PUBLICATION -,- .
© COPYRIGHT - BY TYCO ELECTRONICS CORPORATION. ALL INTERNATIONAL RIGHTS RESERVED.

LOC	DIST
AF	50

REVISIONS

P	LTR	DESCRIPTION	DATE	DWN	APVD
	G	REVISED PER ECR-10-006099	08JUL10	HMR	PD

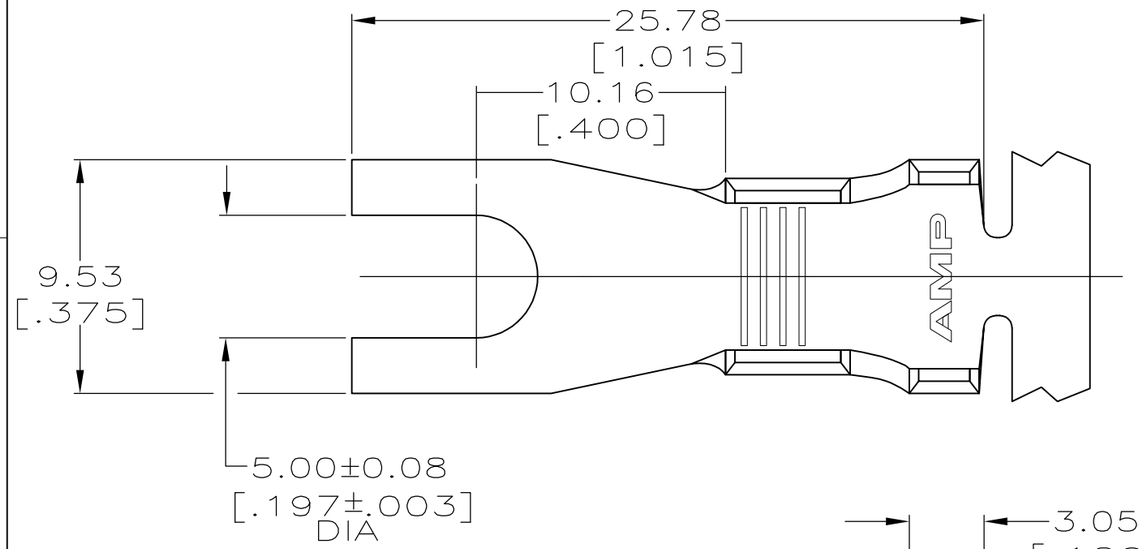

1. CONTINUOUS STRIP ON REEL.

3 INSULATION RANGE IS
3.68–5.33 [.145–.210] FOR AN F TYPE CRIMP.
5.33–7.37 [.210–.290] FOR AN O TYPE CRIMP.

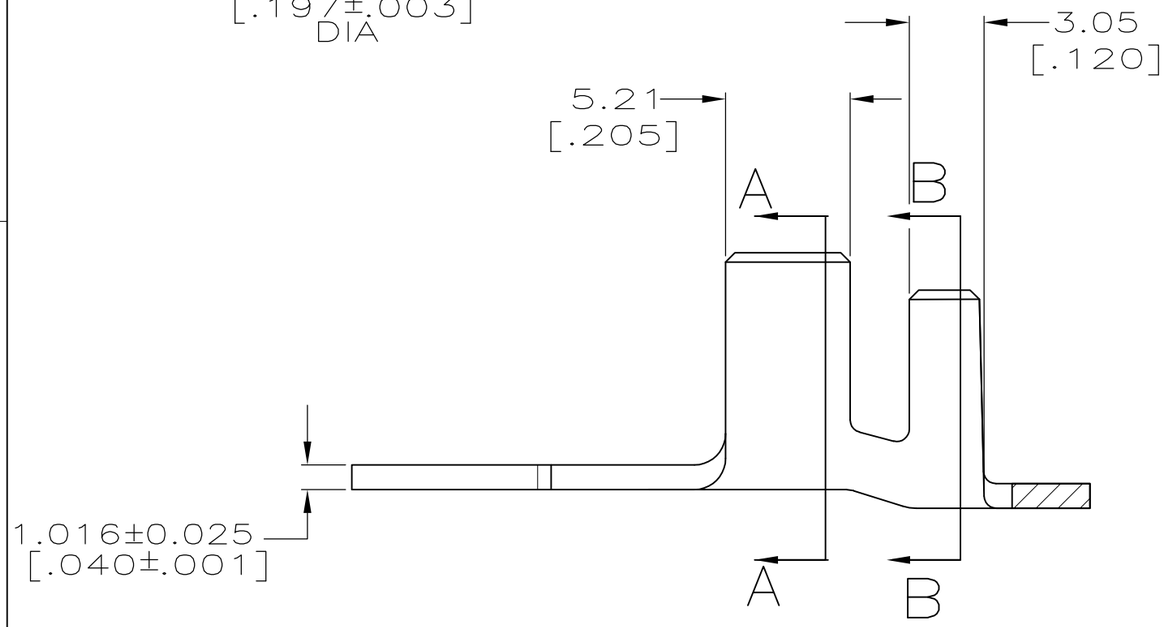

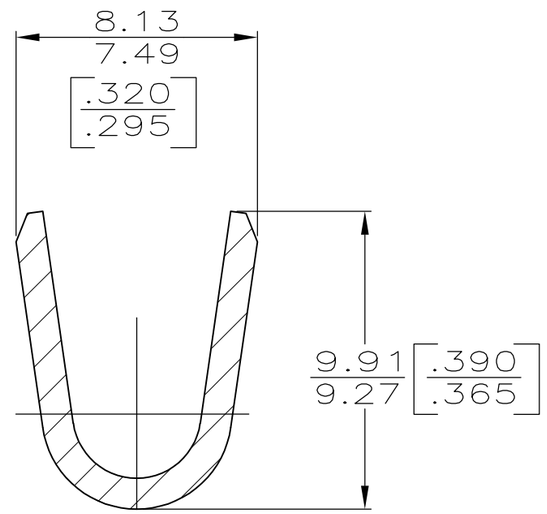

SECTION A–A
SCALE 5:1

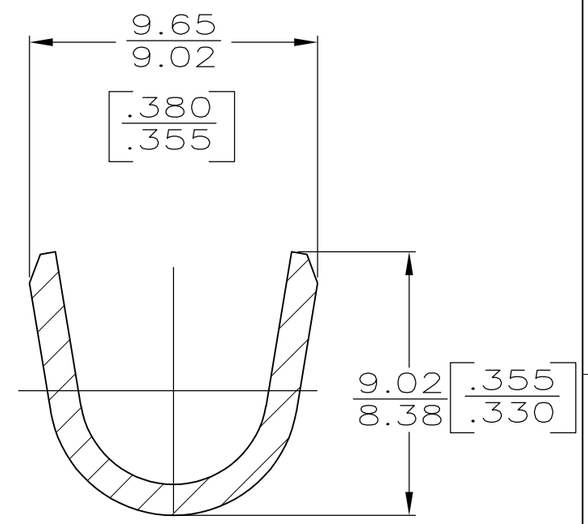

SECTION B–B
SCALE 5:1

3	[10–6] AWG	61855–1
INSULATION RANGE	WIRE RANGE	PART NO

THIS DRAWING IS A CONTROLLED DOCUMENT.

DIMENSIONS: mm [INCHES]

TOLERANCES UNLESS OTHERWISE SPECIFIED:

0 PLC	± –
1 PLC	± –
2 PLC	± 0.25 [.010]
3 PLC	± –
4 PLC	± –
ANGLES	± –

MATERIAL: 082 BRASS
FINISH: TIN

DWN PHILLIP M FORTNEY 2/14/94
CHK JEFF RUTH 2/14/94
APVD GARY YETTER 2/14/94
PRODUCT SPEC —
APPLICATION SPEC —
WEIGHT —

Tyco Electronics
Tyco Electronics Corporation
Harrisburg, PA 17105–3608

NAME: SPADE

SIZE	CAGE CODE	DRAWING NO	RESTRICTED TO
A3	00779	C-61855	—

CUSTOMER DRAWING | SCALE 4:1 | SHEET 1 OF 1 | REV G