THIS DRAWING IS UNPUBLISHED. RELEASED FOR PUBLICATION 2009
© COPYRIGHT 2009 BY - ALL RIGHTS RESERVED.

REVISIONS

P	LTR	DESCRIPTION	DATE	DWN	APVD
	BA1	ECR-14-010250	16JUL2014	KR	TN

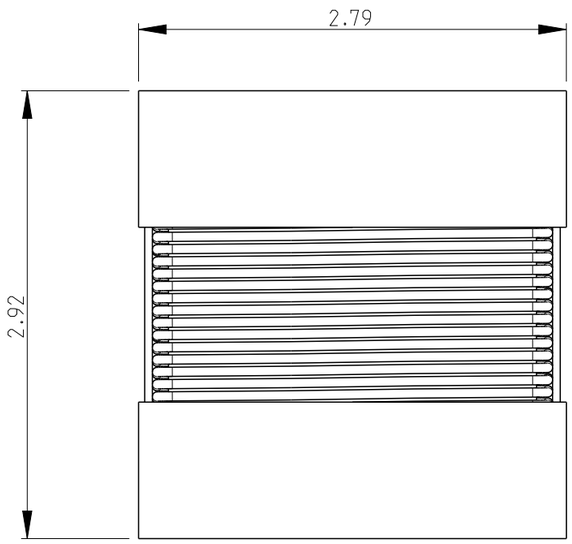

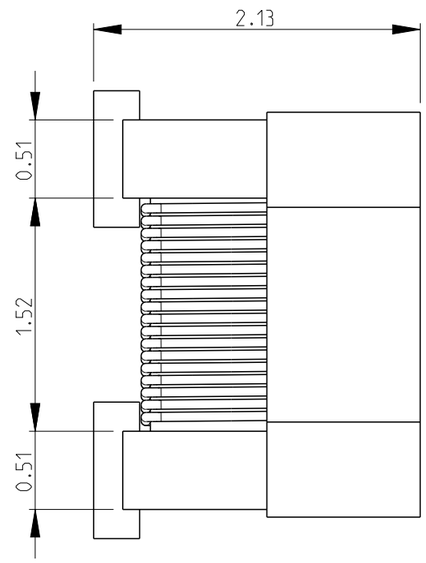

1. TERMINAL WRAPAROUND APPROX 0.007'' (0.18mm) BOTH ENDS
2. FOR FURTHER INFORMATION SEE DATA SHEET FOR 3650 SERIES-LOW INDUCTANCE, HIGH FREQUENCY CHIP INDUCTOR

RECOMMENDED LAND PATTERN
FOR 3650-2C SERIES

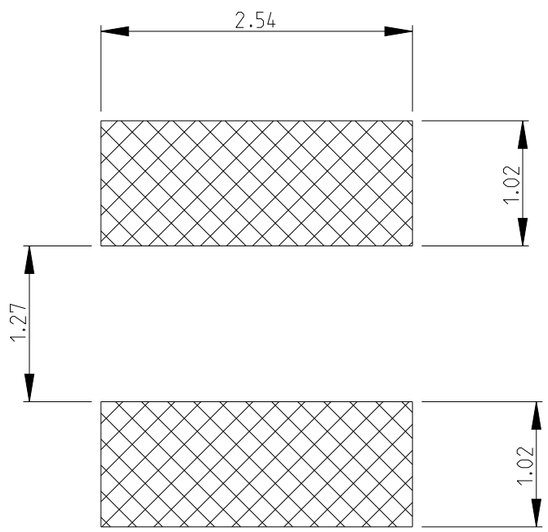

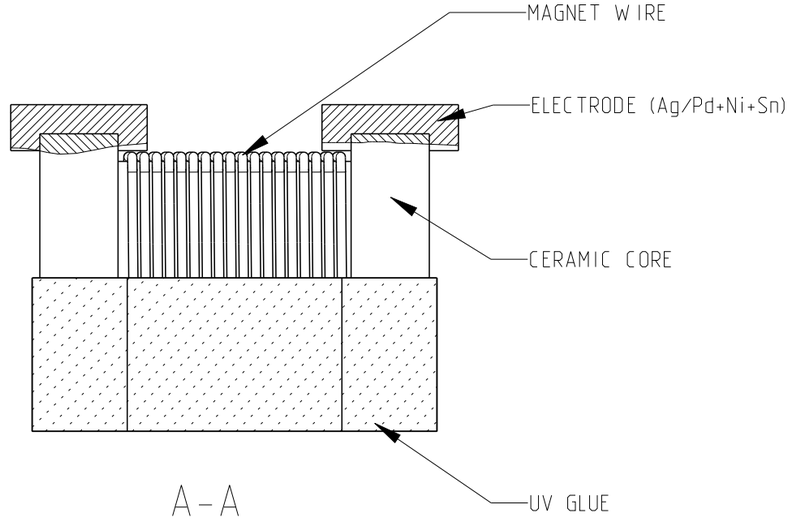

A-A

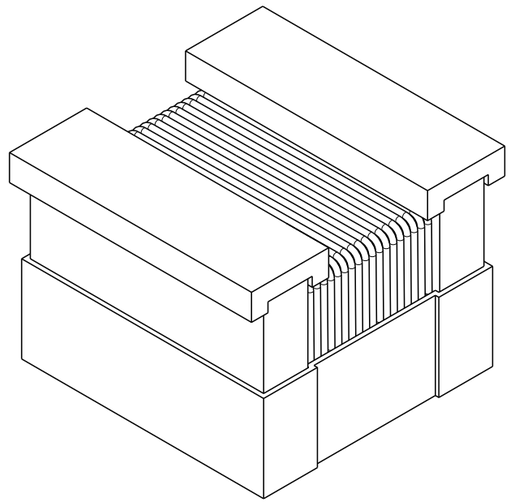

ROHS Compliant

THIS DRAWING IS A CONTROLLED DOCUMENT.

DIMENSIONS: mm

TOLERANCES UNLESS OTHERWISE SPECIFIED:
0 PLC ±0.2
1 PLC ±0.1
2 PLC ±-
3 PLC ±-
4 PLC ±-
ANGLES ±5°

MATERIAL - -

FINISH - -

DWN SUBHASH.M 04-AUG-09
CHK ALLAN.P 04-AUG-09
APVD STEPHEN.P 04-AUG-09
PRODUCT SPEC -
APPLICATION SPEC -
WEIGHT -

TE Connectivity

NAME LOW INDUCTANCE, HIGH FREQUENCY CHIP INDUCTOR SERIES 3650 2C
-

SIZE	CAGE CODE	DRAWING NO	RESTRICTED TO
A3	00779	C-1879023	-

Customer Drawing | SCALE NTS | SHEET 1 OF 1 | REV BA1

1470-19 (3/13)