PART NUMBER	SIZE	L	CABLE OPENING	FACTORY NUMBER
S-2404H-CCT	4	1.063 [27.00]	.438 [11.13]	703 04 04 002
S-2406H-CCT	6	1.500 [38.10]	.438 [11.13]	703 04 06 002
S-2408H-CCT	8	1.938 [49.23]	.563 [14.30]	703 04 08 002
S-2410H-CCT	10	2.375 [60.33]	.563 [14.30]	703 04 10 002
S-2412H-CCT	12	1.813 [46.05]	.625 [15.88]	703 04 12 002

DRAWING REVISIONS			
REV	DOCUMENT	APP	DATE
B	WAS S-24084H-CCT	JOD	2/7/12

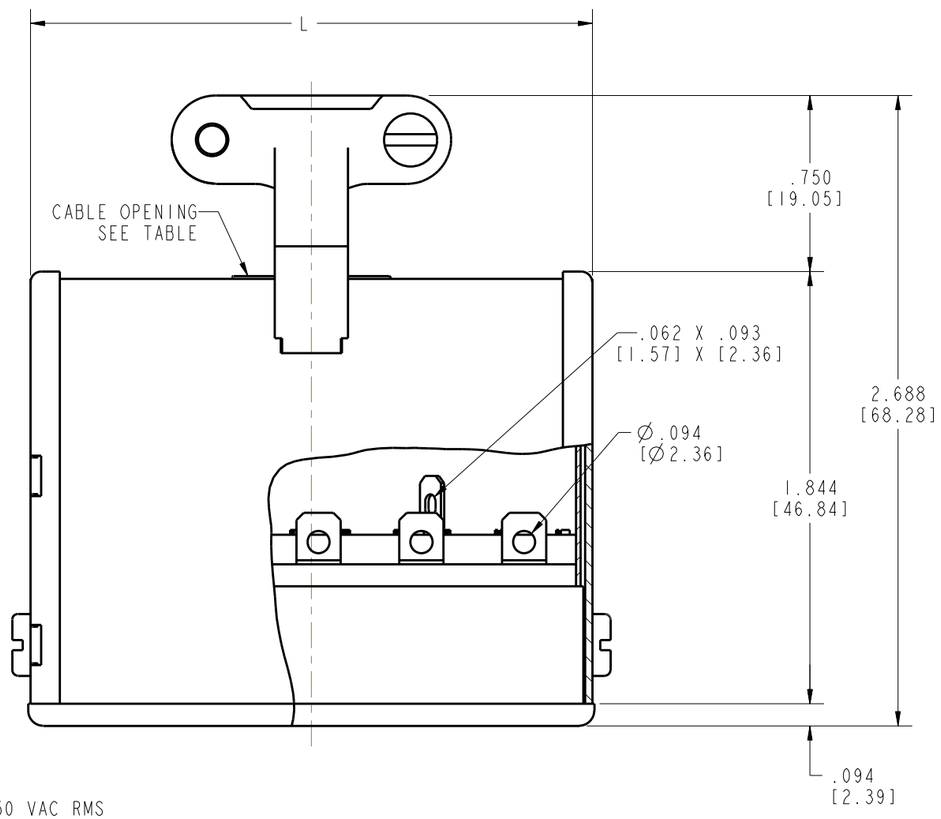

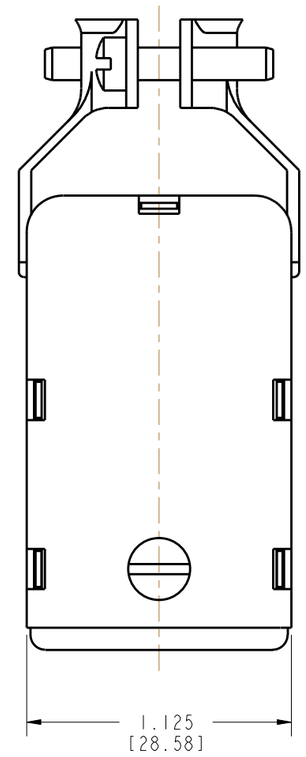

NOTES:

1. SPECIFICATIONS:

ELECTRICAL:
OPERATING VOLTAGE: 250 VAC RMS
CURRENT RATING: 15 AMPS
CURRENT RESISTANCE: 1.0 MILLIOHMS MAXIMUM

INSULATOR: MOLDED MONBLOCK, GENERAL PURPOSE PHENOLIC, BLACK

CONTACT: PHOSPHOR BRONZE, MATTE TIN

BRACKET, SCREW: STEEL, ZINC WITH CLEAR TRAVALENT CHROME

CAP: BLACK CRINKLE

LINER: PAPER, CELLULOSE BASED, UL 94V-0

ENVIRONMENTAL:
OPERATING TEMPERATURE: UP TO +105°C

TERMINATION: SOLDER

2. DIMENSIONS IN [ ] ARE MILLIMETERS

3. ALL DIMENSIONS ARE REFERENCE

RoHS COMPLIANT

MODELED BY: JIMENEZ

UNITS ENGLISH INCHES | PRO/E | CINCH | 1700 FINLEY RD LOMBARD, IL. 60148

DO NOT SCALE DRAWING

UNLESS OTHERWISE SPECIFIED: ALL DIMENSIONS ARE IN INCHES
FILLET/RADII .02 MAX
TOLERANCES .X ± .1 .XX ± .01 .XXX ± .005 ANGULAR ± .5°

THIS DOCUMENT IS THE PROPERTY OF CINCH. NEITHER THIS DOCUMENT NOR ANY OF THE INFORMATION CONTAINED IN IT MAY BE DUPLICATED OR DISCLOSED WITHOUT PRIOR WRITTEN CONSENT OF CINCH.

DRAWN BY: JIMENEZ	DATE: 8/1/06	TITLE: 2400 SERIES, SOCKET CAP ASSEMBLY (CCT)	
DESIGN ENGINEER: A. BALI	8/1/06	MATERIAL	CONTROL SPEC NUMBER: 06-1068
DESIGN ENGINEERING MGR.: A. BALI	8/1/06	MATERIAL SPEC NUMBER / FINISH	PROJECT NUMBER: C14789-2
MFG. ENGINEERING		CAD FILE NUMBER: S2404HCCT	DRAWING NUMBER: S-2404H-CCT
QUALITY ASSURANCE		CAGE IDENT NO.: 71785 / SIZE: B	SCALE: 1.000 / SHEET 1 OF 1