THIS DRAWING IS UNPUBLISHED.
© 2016 COMMSCOPE, INC. CONFIDENTIAL
RELEASED FOR PUBLICATION
NOTICE- THESE DRAWINGS AND SPECIFICATIONS ARE THE PROPRIETARY PROPERTY OF COMMSCOPE, INC. AND MAY BE USED ONLY FOR THE SPECIFIC PURPOSE AUTHORIZED IN WRITING BY COMMSCOPE, INC.

REVISIONS

P	LTR	DESCRIPTION	DATE	DWN	APVD
	A	REVISE PER ECR-06-006972	23MAR2006	BB	SB
	B	REVISE PER ECR-06-023926	12OCT2006	BB	SB
	C	REV PER ECN 8000019318	31JAN2017	GG	TE

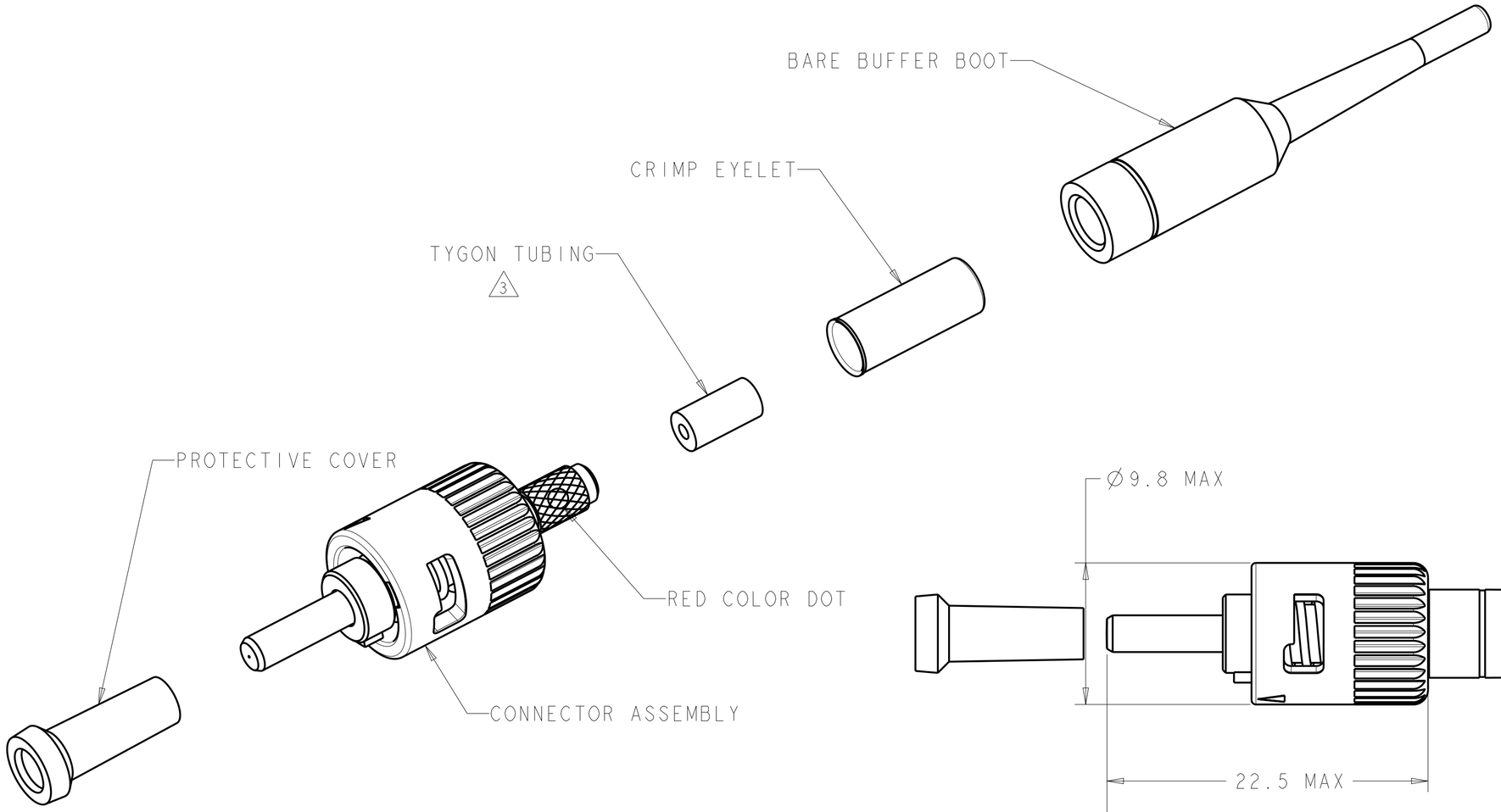

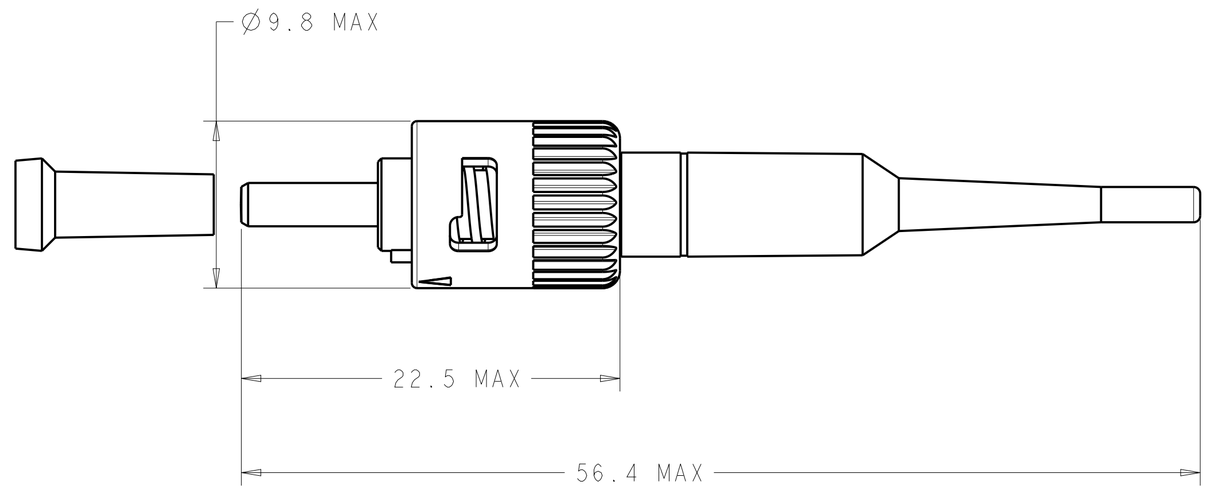

ASSEMBLED CONNECTOR

1 MATERIAL:
- PROTECTIVE COVER: LDPE, COLOR: BLACK, NON-FR.
- CONNECTOR ASSEMBLY
  - FERRULE ASSEMBLY: CERAMIC/NICKEL PLATED BRASS
  - SPRING: STAINLESS STEEL
  - COUPLING NUT: ZINC
  - RETENTION RING: STAINLESS STEEL
- CRIMP EYELET: TIN PLATED COPPER
- BARE BUFFER BOOT: TPE, UL94 V-0 RATED AT QUALIFYING THICKNESS
- TYGON TUBING: TYGON, COLOR: CLEAR

2 BULK PACKAGE.

3 TYGON TUBING USED ONLY WITH 900um BUFFERED FIBER. (FIBER WITHOUT STRENGTH MEMBERS)

TUBING 3	BUFFER BOOT COLOR	PART NUMBER
2 -	-	5503613-4
2 TYGON	YELLOW	5503613-3
TYGON	YELLOW	5503613-2

THIS DRAWING IS A CONTROLLED DOCUMENT.

DIMENSIONS: mm

TOLERANCES UNLESS OTHERWISE SPECIFIED:
0 PLC ±-
1 PLC ±-
2 PLC ±-
3 PLC ±-
4 PLC ±-
ANGLES ±-

MATERIAL 1 -
FINISH -

DWN B.BRIGGS 24JUN2005
CHK S.BUCHTER 24JUN2005
APVD S.BUCHTER 24JUN2005
PRODUCT SPEC -
APPLICATION SPEC -
WEIGHT -

COMMSCOPE, INC.

NAME: CONNECTOR KIT, 2.5mm BAYONET, SINGLEMODE, OPTIMATE

SIZE A2 | CAGE CODE | DRAWING NO C-5503613 | RESTRICTED TO -

CUSTOMER DRAWING | SCALE 4:1 | SHEET 1 OF 1 | REV C

1471