THIS DRAWING IS UNPUBLISHED. RELEASED FOR PUBLICATION 20
© COPYRIGHT 20 BY - ALL RIGHTS RESERVED.

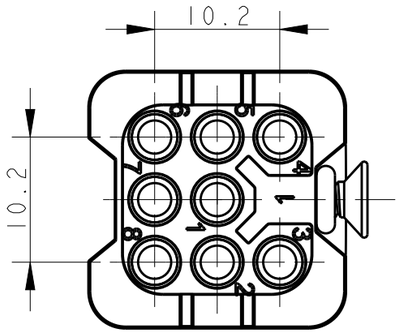

M3 SCREW
RECOMMENDED TIGHTENING
TORQUE 0.5Nm

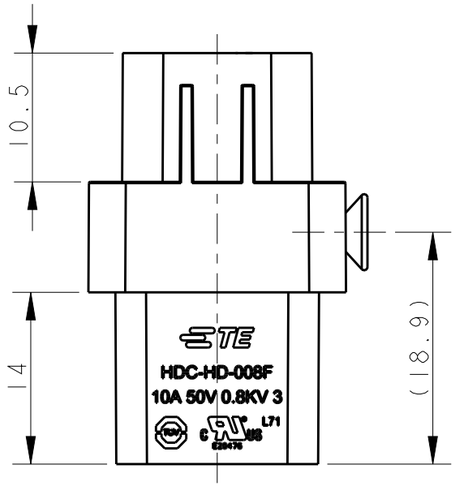

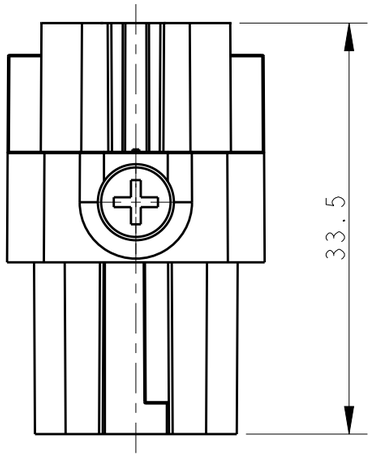

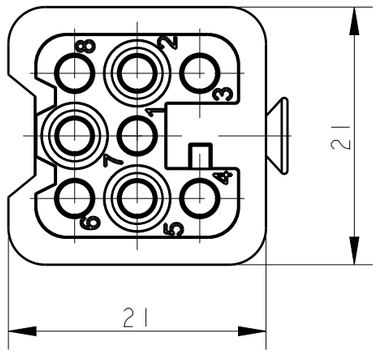

REVISIONS

P	LTR	DESCRIPTION	DATE	DWN	APVD
	A	INITIAL RELEASE	16DEC2014	HMR	CW
	B	ECR-15-013292	16SEP2015	DL	CW
	B1	ECR-16-009730	06JUL2016	BS	CW

NOTES:
1. TECHNICAL CHARACTERISTICS:
   INSULATION MATERIAL: PBT
   RATED VOLTAGE: 50 V
   RATED CURRENT: 10 A
   INSULATION RESISTANCE: >=400MΩ
   RATED IMPULSE VOLTAGE: 0.8 KV
   POLLUTION DEGREE: 3
   FLAMMABILITY: UL94V-0
   MATING CYCLES: 500 CYCLES
   WIRE RANGE: 0.14-2.5 mm^2 (26-14 AWG)
   CONTACT TYPE: CRIMP CONTACT
2. CONTACT NEED TO BE ORDERED SEPARATELY.
   (ORDER No. REFER TO DRAWING:T20200X20XX000)

注释：
1. 技术参数：
   绝缘材料： PBT
   额定电压： 50V
   额定电流： 10A
   绝缘电阻： >=400MΩ
   额定脉冲电压： 0.8 KV
   污染等级： 3
   阻燃等级： UL94V-0
   插拔次数： 500次
   接线范围： 0.14-2.5 mm^2 (26-14 AWG)
   接线类型： 冷压接
2. 端子需要单独订购.
   (订货号参考图面： T20200X20XX000)

PART NUMBER 料号	DESCRIPTION 描述
T2020082201-001	HD-008-F HD-008母插(不锈钢螺丝)
T2020082201-000	HD-008-F HD-008母插

THIS DRAWING IS A CONTROLLED DOCUMENT.

DIMENSIONS: mm

TOLERANCES UNLESS OTHERWISE SPECIFIED:
0 PLC ±-
1 PLC ±-
2 PLC ±-
3 PLC ±-
4 PLC ±-
ANGLES ±-

MATERIAL - -
FINISH - -

DWN 16DEC2014 RAGHAVENDRA H M
CHK 16DEC2014 CHRIS WANG
APVD 16DEC2014 XU XIANG
PRODUCT SPEC 108-137042
APPLICATION SPEC 114-137042
WEIGHT -

TE Connectivity

NAME HD-008-F

SIZE	CAGE CODE	DRAWING NO	RESTRICTED TO
A3	-	C-T2020082201000	-

CUSTOMER DRAWING

SCALE 2:1 SHEET 1 OF 1 REV B1