THIS DRAWING IS UNPUBLISHED. RELEASED FOR PUBLICATION -.- .
© COPYRIGHT - By - ALL RIGHTS RESERVED.

| LOC | DIST |
|---|---|
| G | 14 |

REVISIONS

| P | LTR | DESCRIPTION | DATE | DWN | APVD |
|---|---|---|---|---|---|
| | F1 | REVISED PER ECO-11-004820 | 11MAR11 | RK | HMR |

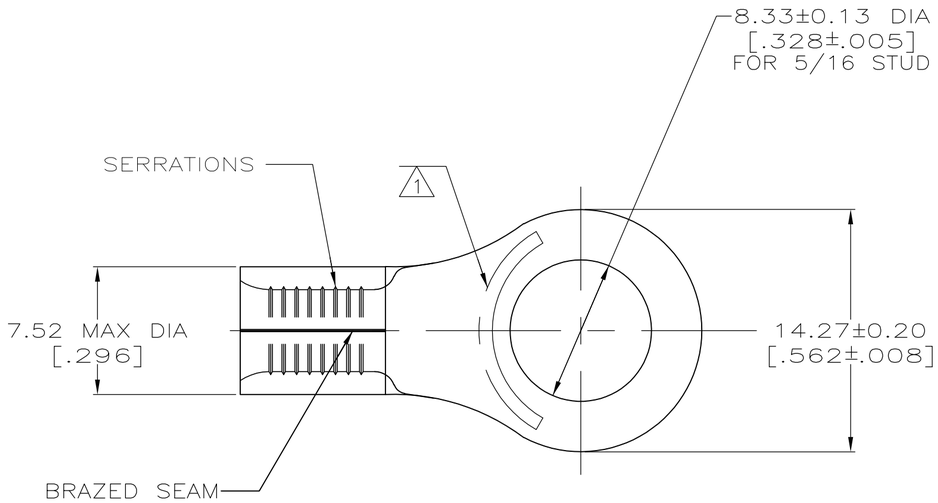


| AMP WIRE RANGE | Listed FILE E13288 | LR7189 Certified | MILITARY P/N AND CLASS |
|---|---|---|---|
| 8 AWG SOLID OR STRANDED | 8 AWG STRANDED | 8 AWG SOLID OR STRANDED | MS 20659-108 CLASS 2 PN 31808 ONLY |

1. STAMP AMP 8* APPROX AS SHOWN
2. COPPER PER ASTM B-152, ANNEALED
3. 0.00254 [.000100] MIN TIN PLATE PER ASTM B-545

4 LONGER WIRE BARREL THAN OTHER #8 AWG, PROPER WIRE STRIP LENGTH: 9.12-9.94 [ .359-.390]; IGNORE TOOLING INSTRUCTION SHEET STRIP LENGTH

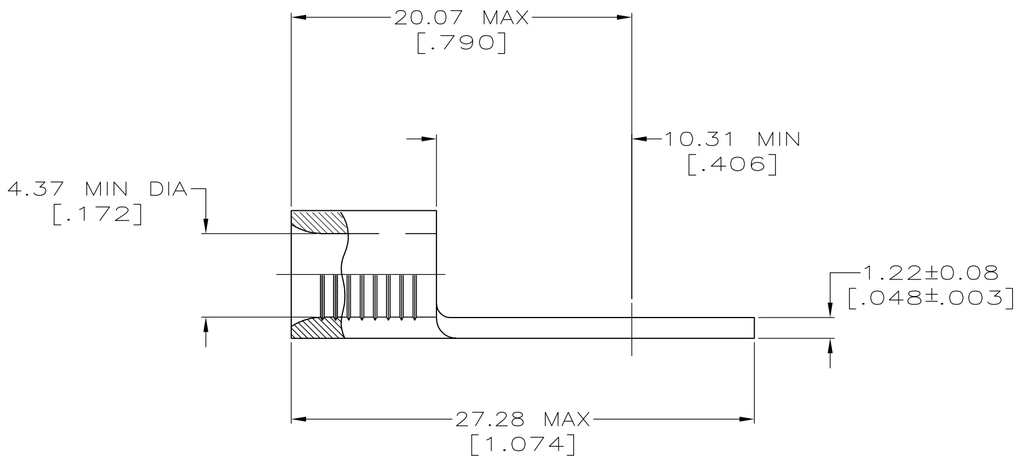


31808

| QTY | PACKAGE TYPE | PART NO. |
|---|---|---|
| 50 | LOOSE PIECE, BOX | 8-31808-2 |
| 1000 | ON TAPE , REEL | 2-31808-2 |
| -- | LOOSE PIECE | 31808 |

AMP INCORPORATED
CUSTOMER SERVICE SYSTEMS

| | |
|---|---|
| FOR ADDITIONAL PRODUCT INFORMATION OR COPIES OF DRAWINGS AND TECHNICAL DOCUMENTS | PRODUCT INFORMATION CENTER 1-800-522-6752 |
| FOR APPLICATION TOOLING INFORMATION | TOOLING ASSISTANCE CENTER 1-800-722-1111 |
| FOR ORDER ENTRY | 1-800-526-5142 |

THIS DRAWING IS A CONTROLLED DOCUMENT FOR AMP INCORPORATED. IT IS SUBJECT TO CHANGE AND THE CONTROLLING ENGINEERING ORGANIZATION SHOULD BE CONTACTED FOR THE LATEST REVISION.

MAX RECOMMENDED OPERATING TEMPERATURE: 170°C MAX

VOLTAGE RATING: N/A

CIRCULAR MIL AREA: 6.64-10.5mm² [13,100-20,800] SOLID OR STRANDED

THIS DRAWING IS A CONTROLLED DOCUMENT.

DIMENSIONS: mm[INCHES]

TOLERANCES UNLESS OTHERWISE SPECIFIED:
0 PLC ± -
1 PLC ± -
2 PLC ± -
3 PLC ± -
4 PLC ± -
ANGLES ± -

MATERIAL 2

FINISH 3

| | | |
|---|---|---|
| DWN | TA BRINKMAN | 3-24-93 |
| CHK | DA PATTERSON | 3-24-93 |
| APVD | JL MECKLEY | 3-24-93 |
| PRODUCT SPEC | — | |
| APPLICATION SPEC | — | |
| WEIGHT | — | |

TE Connectivity

NAME: TERMINAL, RING TONGUE, SOLISTRAND

| SIZE | CAGE CODE | DRAWING NO | RESTRICTED TO |
|---|---|---|---|
| A2 | 00779 | C-31808 | — |

CUSTOMER DRAWING | SCALE 4:1 | SHEET 1 OF 1 | REV F1

1471-9 (3/11)